taconova

TACOFLOW3 MAX
TACOFLOW3 MAX PRO

HEATING AND COOLING CIRULCATION PUMP

INSTRUCTIONS FOR INSTALLATION AND USE

MKTG-TRA-MAN-E9150400-10/2019-ENG

CONTACT AND FURTHER INFORMATION TACONOVA.COM

Taconova Group AG | Neunbrunnenstrasse 40 | CH-8050 Zurigo | T +41 44 735 55 55 | F +41 44 735 55 02 | group@taconova.com | taconova.com
Taco Italia S.r.L. | Via Galileo Galilei, 89/91 | IT-36066 Sandrigo (VI) | T +39 0444 666800 | F +39 0444 666801 | info@tacoitalia.com | tacoitalia.com

INDEX

INTRODUCTION

Dear Client,
We would like to firstly thank you for trusting us with your new purchase of the **"Circulator - TacoFlow3 Series"**.
We are confident that our product will meet your expectations, thanks to the reliability achieved with our constant attention to the innovative processes and the technical and commercial transformations of the markets.
We are also certain to be able to fulfil all your future operating requirements, and we therefore are happy to remain at your disposal to offer you all our experience and knowledge for the best solution to all your questions.

⚠ WARNING

IT IS FORBIDDEN TO USE THE CIRCULATOR BEFORE IT IS COMMISSIONED AND THE TEST CERTIFICATE IS SIGNED.

1 MANUFACTURER

Name	**TACO ITALIA SRL**
Address	**Via G. Galilei, 89-91 - 36066 Sandrigo (VI) Italy**
Tel.	**+39 0444 666800**
Fax	**+39 0444 666801**
E-mail	**info@tacoitalia.com**
Website	**www.tacoitalia.com**

TAB. 1 *(Manufacturer)*

1.1 SERVICE CENTRES

Contact the Manufacturer to be directed toward the relevant Service Centre.

1.2 REQUESTING TECHNICAL SUPPORT

Requests for intervention must be addressed directly to the Manufacturer, specifying**:**
1) The designation of the circulator
2) The circulator model
3) The serial number (see CE marking or EU declaration of conformity)
4) The year of construction
5) Type of problem encountered

2 RELEVANT INFORMATION

2.1 IDENTIFICATION OF THE MANUAL

This document is called **Instruction Manual** (hereinafter “manual”).

The manual is identified by the following data shown on the cover and at the foot of the page:
- “EN” language code
- “Translation of the original instructions” wording
- ISO 7000 symbol of the instruction manual (on the cover)
- Identification code
- Issue
- Revision

2.2 INFORMATION ABOUT THE MANUAL

⚠ ATTENTION

THIS MANUAL MUST ALWAYS BE AVAILABLE TO THE AUTHORISED OPERATORS AND BE STORED NEAR THE WELL-KEPT AND PRESERVED CIRCULATOR.

THIS MANUAL MUST BE DELIVERED WITH THE CIRCULATOR IF IT IS SOLD TO ANOTHER USER.

IT IS ADVISABLE TO TAKE NOTE OF THE IDENTIFICATION DATA OF THE DOCUMENT: CODE, ISSUE AND REVISION **(SEE PAR. 2.1)** TO REQUEST A COPY OF THE MANUAL FROM THE MANUFACTURER IN THE CASE OF LOSS OR DETERIORATION.

THIS MANUAL REFLECTS THE STATE OF THE ART OF THE CIRCULATOR AT THE TIME OF MARKETING AND CANNOT BE CONSIDERED INADEQUATE SIMPLY BECAUSE IT CAN BE SUBSEQUENTLY UPDATED.

⚠ ATTENTION

BEFORE USING THE CIRCULATOR, IT IS MANDATORY TO READ AND BE CERTAIN YOU HAVE UNDERSTOOD ALL THE PARTS OF THIS MANUAL.

THIS MANUAL IS AN INTEGRAL PART OF THE CIRCULATOR: KEEP FOR FUTURE CONSULTATION.

FAILURE TO COMPLY WITH THE INSTRUCTIONS AND WARNINGS DESCRIBED IN THIS MANUAL WILL VOID THE WARRANTY.

THE MANUFACTURER CANNOT BE HELD LIABLE FOR DAMAGE TO PERSONS, ANIMALS OR PROPERTY CAUSED BY FAILURE TO COMPLY WITH THE INSTRUCTIONS AND WARNINGS DESCRIBED IN THIS MANUAL AND BY THE CIRCULATOR BEING USED INCORRECTLY.

2.3 RECIPIENTS OF THE MANUAL

This manual is intended exclusively for the operators who are authorised to use and service the circulator based on the specific technical and professional skills required for the type of intervention.

2.4 AUTHORISED OPERATORS

⚠ WARNING

AUTHORISED OPERATORS MUST ONLY CARRY OUT THE INTERVENTIONS ON THE CIRCULATOR THAT FALL UNDER THEIR SPECIFIC COMPETENCE.

BEFORE CARRYING OUT ANY INTERVENTION ON THE CIRCULATOR, THE AUTHORISED OPERATORS MUST ENSURE THAT THEY ARE IN A TOP PSYCHOPHYSICAL STATE SO AS TO ALWAYS GUARANTEE COMPLIANCE WITH THE SAFETY CONDITIONS.

Symbol	Description of the technical and professional skills
	OPERATOR IN CHARGE A professionally trained operator who, in compliance with the laws in force in the country of use, is authorised to use the circulator and to exclusively perform: • the checks and operations before start-up **(see par. 12.1)**; • start-up **(see par. 12.2)**; • shutdown **(see par. 12.5)** and restore after shutdown **(see par. 12.6.1)**; • routine maintenance **(see par. 14.2)**. All operations must be carried out in strict compliance with the instructions given in this manual, by the operator equipped with the personal protective equipment (PPE) indicated in **chap. 8**.
	MECHANICAL AND HYDRAULIC MAINTENANCE TECHNICIAN A qualified technician, authorised to perform only interventions on the mechanical and hydraulic parts to carry out adjustments, maintenance or repairs even with the protections disabled (upon consent of the Manager), in strict compliance with the instructions given in this manual or other specific document provided exclusively by the Manufacturer and/or by the Service Centre, equipped with the personal protective equipment (PPE) indicated in **chap. 8**.
	ELECTRICAL MAINTENANCE TECHNICIAN A qualified technician (electrician in possession of the professional technical requirements set forth in the regulations in force in the country of use), authorised to perform only interventions on electrical devices to carry out adjustments, maintenance or repairs even in the presence of electrical voltage and with the protections disabled (upon consent of the Manager), in strict compliance with the instructions given in this manual or other specific document provided exclusively by the Manufacturer and/or by the Service Centre, equipped with the personal protective equipment (PPE) indicated in **chap. 8**.
	MANUFACTURER'S TECHNICIAN A qualified technician, made available by the Manufacturer and/or the Service Centre, who has specific knowledge of the circulator and is authorised to provide the required technical assistance, perform routine and extraordinary maintenance or operations not described in this manual, equipped with personal protective equipment (PPE) indicated in **chap. 8**.
	MANAGER (a person who is only present and acknowledged in the workplaces) A person who, due to professional skills and within the limits of hierarchical and functional powers in accordance with the nature of the assignment conferred, supervises the work activity and guarantees the implementation of the directives given, monitoring the correct execution by the workers and exercising a functional power of initiative.

TAB. 2 *(Authorised operators)*

2.5 CONSULTATION NOTES

	Bold text: Highlights certain significant phrases and references in the text.
	Generic or specific warning sign: Highlights risks related to the health and safety of the authorised operators and/or risks of damage or malfunction of the circulator.
	Generic or specific mandatory sign: Indicates a prescription (obligation to perform an action).
	Generic or specific prohibition sign: Highlights the prohibited course of action.
	EX warning sign: Highlights the risk due to an explosion.
	Crossed out bin: Highlights the prohibition of disposing of electrical and electronic equipment (WEEE) into bins.
	Sign indicating it is mandatory to read the manual: In order to use the circulator safely, it is mandatory to read and fully understand this instruction manual and the attached technical documentation.
	Signal indicating it is mandatory to disconnect the circulator before performing maintenance or repairs: For safe interventions on the circulator it is mandatory to set it in the **safety state (see par. 5.1)**.
	Authorised operator signal: The symbol found at the beginning of a chapter or paragraph indicates which operators are authorised **(see par. 2.4)** to carry out the indicated operations.

TAB. 3 *(Consultation notes)*

⚠ DANGER
INDICATES A HAZARD WITH A HIGH LEVEL OF RISK THAT CAN LEAD TO DEATH OR SERIOUS INJURY.

⚠ WARNING
INDICATES A HAZARD WITH A MEDIUM LEVEL OF RISK THAT CAN LEAD TO DEATH OR SERIOUS INJURY.

⚠ ATTENTION
INDICATES A HAZARD WITH A LOW LEVEL OF RISK THAT CAN LEAD TO MINOR INJURY.

INFORMATION
INDICATES RELEVANT INFORMATION.

2.6 MAIN ABBREVIATIONS

ca.	Circa	**par.**	Paragraph
chap.	Chapter	**Pos.**	Position
PPE	Personal Protective Equipment	**q.ty**	Quantity
RH	Right side	**Ref.**	Reference
etc.	Etcetera	**LH**	Left side
e.g.	Example	**s**	Seconds
FIG.	Figure/s	**TAB.**	Table
h	Hours	**v.**	See
MAX.	Maximum	**-**	From, to
MIN.	Minimum	**Ø**	Diameter
min	Minutes	**>**	Greater than
mm	Millimetres	**≥**	Greater than or equal to
NO.	Number	**<**	Less than
pag.	Page	**≤**	Less than or equal to

TAB. 4 *(Main abbreviations)*

2.7 ALL RIGHTS RESERVED

2.8 WARRANTY

The warranty covers construction and manufacturing defects.
It is not applicable in the event of damage resulting from incorrect installation or system design defects, damage during transport or seizure due to dirt residue inside the system. Proof of purchase is required to administer warranty claims.

3 IDENTIFICATION OF THE CIRCULATOR

3.1 DESIGNATION

The machine in question (hereinafter circulator) is denominated as:

CIRCULATOR

3.2 SERIES

TacoFlow3

3.3 MODEL

MAX / MAX PRO

Features					
Nominal diameter (ND) suction/delivery (mm)	**MAX Head (dm)**	**Centre distance (*) (mm)**	**Connection**	**Electrical connection**	**Communication**
25	100	180	G 1$^{1/2}$	Plug&Play	PWM/0-10 V
	80				
	60				
32	100		G 2		
	80				
	60				
(*) Distance between the delivery and suction connections					

TAB. 5 *(Series/Model features)*

Example:

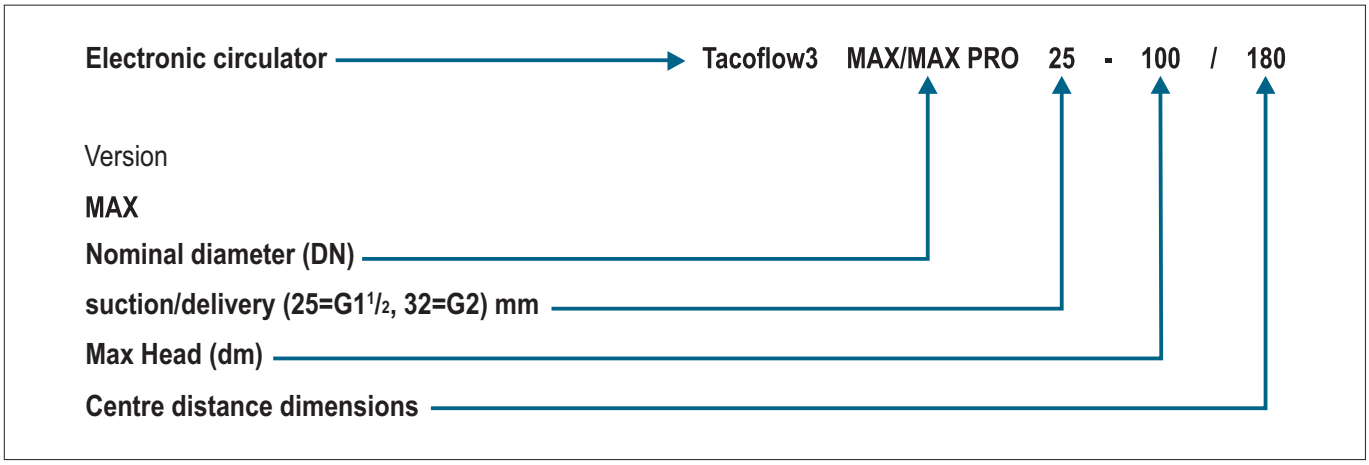

4 CONFORMITY

4.1 EU DECLARATION OF CONFORMITY

Manufacturer	**TACO ITALIA SRL** Via G. Galilei, 89 - 91 - 36066 Sandrigo (VI) Italy Tel. +39 0444 666800 - Fax +39 0444 666801 info@tacoitalia.com - www.tacoitalia.com
Declares under its sole responsibility that the machine	
Designation	**CIRCULATOR**
Series - Model	**TacoFlow3** ☐ **MAX** ☐ **MAX PRO**
Serial number	
Complies with the following Directives	
2014/35/EU	Directive of the European Parliament and of the Council of 26 February 2014, on the harmonisation of the laws of the Member States relating to the making available on the market of electrical equipment designed for use within certain voltage limits (recast)
2014/30/EU	Directive of the European Parliament and of the Council of 26 February 2014, on the harmonisation of the laws of the Member States relating to electromagnetic compatibility (recast)
2011/65/EU	Directive of the European Parliament and of the Council of 8 June 2011, on the restriction of using certain hazardous substances in electrical and electronic equipment
2009/125/EU	Directive of the European Parliament and of the Council of 21 October 2009, establishing a framework for the setting of ecodesign requirements for energy-related products
2012/19/EU	Directive of the European Parliament and of the Council of 4 July 2012, on waste electrical and electronic equipment (WEEE)
Complies with the provisions of the following standards	
EN 60335-1:2012 (EN 60335-1:2012/AC:2014 - EN 60335-1:2012/A11:2014) EN 60335-2-51:2003 (EN 60335-2-51:2003/A1:2008 - EN 60335-2-51:2003/A2:2012) EN 55014-1; EN 55014-2; EN 61000-3-2; EN 61000-3-3; EN 62233:2008 (EN 62233:2008/AC:2008); EN 16297-1:2012; EN 16297-2:2012	
Person authorised to draw up the declaration	
Name and role	Luca Bolcati - General Manager and Managing Director
Place	**Sandrigo (VI) Italy** Date **02/09/19** Signature .....

4.2 NAMEPLATE AND CE MARKING

The nameplate and CE marking are applied on the external part of the circulator, in accordance with the Directives indicated in the EU Declaration of Conformity.

⚠ ATTENTION

UPON PURCHASE, MAKE SURE THAT THE CIRCULATOR BEARS THE NAMEPLATE AND CE MARKING. IF NOT, IMMEDIATELY INFORM THE MANUFACTURER OR THE SERVICE CENTRE.

THE CIRCULATOR IS NON CONFORMING WITHOUT THE NAMEPLATE AND CE MARKING, AND THEREFORE MUST NOT BE USED.

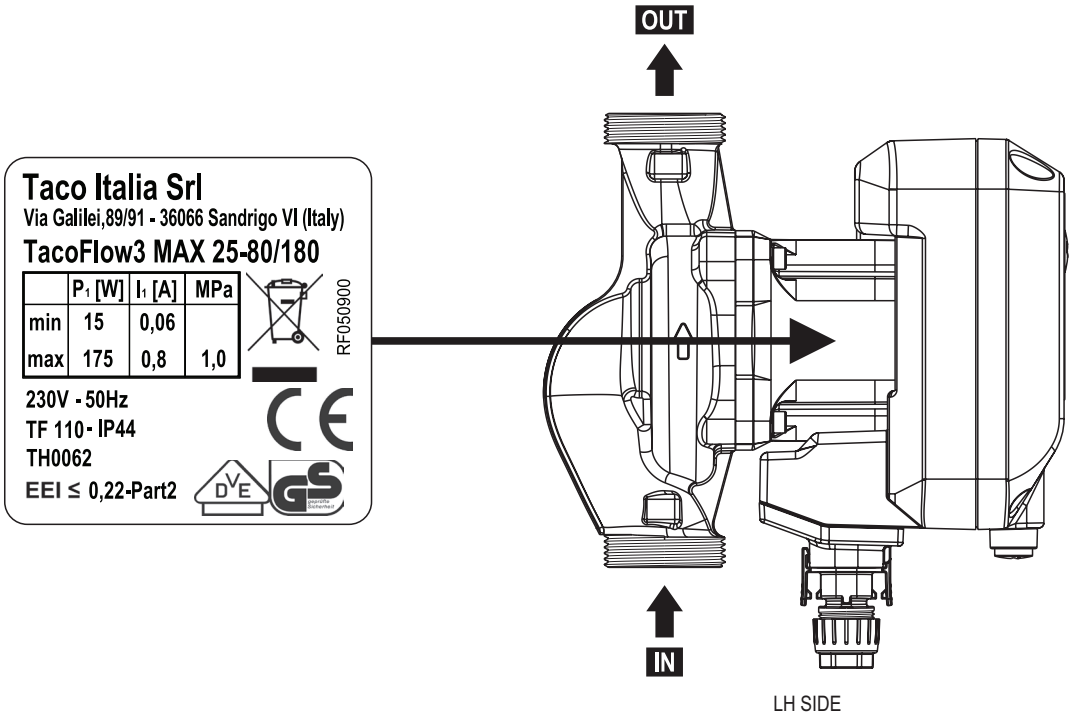

FIG. 1 *(Nameplate and CE marking)*

5 DESCRIPTION OF THE CIRCULATOR

The circulator is of wet rotor type with an integrated electronic frequency converter (INVERTER).
The circulator combines an advanced hydraulic system, a high efficiency motor, intuitive control electronics and operating software that allow it to adapt perfectly to the various operating conditions and the actual system requirements. The motor including the electronic regulation module is fitted on the pump casing with four screws. Depending on the set operating mode, the differential pressure is based on different criteria.
In all regulation modes, the circulator adapts to the different system loads.

5.1 SAFETY STATE OF THE CIRCULATOR

The circulator is in the **safety state** when it is isolated from the energy supply source, the residual energies have been dissipated and no conditions that could compromise the general safety state are found.
Proceed as follows to set the circulator in the **safety state**:

1) Stop the circulator by turning the main electrical switch (installed by the Client) to **Pos. "0"** or by disconnecting the plug from the electrical socket
2) Close the system valves downstream and upstream of the circulator
3) Wait for the circulator to cool

5.2 INTENDED USE

Application	Civil and/or industrial heating systems
Place of use	The circulator must be placed indoors, in a sufficiently lit and ventilated place that is protected from bad weather, which conforms to the laws in force in the country of use in terms of safety
Intended use	Circulation of water/liquid of the hot water heating, air conditioning and solar thermal renewable energy systems for residential and commercial buildings, such as: • Residential buildings and condominiums • Public buildings • Hotels and restaurants/professional kitchens • Schools and gyms/sports facilities • Offices, craft and industrial buildings
Pumped liquids	Clean, non-aggressive and non-explosive liquids, which do not contain solid particles, fibres or mineral oils. In the heating systems: water according to VDI 2035, Mixtures of water and glycol with percentages that are not higher than 30%

TAB. 6 *(Intended use)*

⚠ WARNING

THE APPLIANCE CAN BE USED BY CHILDREN UNDER 8 YEARS OF AGE AND BY PEOPLE WITH REDUCED PHYSICAL, SENSORY OR MENTAL ABILITIES, OR WITHOUT EXPERIENCE OR THE NECESSARY KNOWLEDGE, PROVIDED THAT THEY ARE SUPERVISED OR AFTER THEY HAVE BEEN GIVEN INSTRUCTIONS RELATING TO THE SAFE USE OF THE APPLIANCE AND THEY HAVE UNDERSTOOD THE RISKS INVOLVED. CHILDREN MUST NOT PLAY WITH THE APPLIANCE.

CLEANING AND MAINTENANCE INTENDED TO BE PERFORMED BY THE USER MUST NOT BE CARRIED OUT BY UNSUPERVISED CHILDREN.

5.3 REASONABLY FORESEEABLE MISUSE

The circulator has has been designed and built for the intended use referred to in **par. 5.2**, therefore any other type of use is prohibited so as to guarantee the safety of the authorised operators and the efficiency of the circulator itself at all times.

⚠ DANGER

IT IS FORBIDDEN TO START-UP THE CIRCULATOR IN AN ENVIRONMENT WITH A POTENTIALLY EXPLOSIVE ATMOSPHERE AND/OR IN THE PRESENCE OF COMBUSTIBLE DUST (E:G. WOOD DUST, FLOUR, SUGAR AND GRAINS).

⚠ DANGER

1) IT IS FORBIDDEN TO USE THE CIRCULATOR INCORRECTLY OR FOR ANY USE OTHER THAN THOSE INTENDED BY THE MANUFACTURER **(SEE PAR. 5.2)**.
2) IT IS FORBIDDEN FOR UNAUTHORISED PERSONS **(SEE PAR. 2.4)** OR ANYONE WHO IS NOT IN A TOP PSYCHOPHYSICAL STATE TO USE THE CIRCULATOR.
3) IT IS FORBIDDEN TO USE THE CIRCULATOR WITHOUT GUARDS AND PROTECTIVE DEVICES OR EQUIPPED WITH INEFFECTIVE GUARDS AND DEVICES.
4) IT IS FORBIDDEN TO NEUTRALISE, TAMPER WITH, MANIPULATE OR BYPASS THE GUARDS AND PROTECTIVE DEVICES INSTALLED IN THE CIRCULATOR.
5) IT IS FORBIDDEN TO USE THE CIRCULATOR FOR PUMPING LIQUIDS OTHER THAN THOSE THAT ARE SUITABLE FOR PUMPING **(SEE PAR. 5.8)**.
6) IT IS FORBIDDEN TO USE THE CIRCULATOR IN DRY MODE.
7) IT IS FORBIDDEN TO HANDLE THE CIRCULATOR BY GRASPING THE HEAT SINK AS THIS CAN DAMAGE THE ELECTRONIC BOARD.

⚠ WARNING

1) IT IS FORBIDDEN TO MAKE ANY MODIFICATION TO THE CIRCULATOR, WHICH INVALIDATES THE WARRANTY.
2) IT IS FORBIDDEN TO INSTALL EQUIPMENT, ACCESSORIES AND/OR NON-ORIGINAL SPARE PARTS ON THE CIRCULATOR.
3) IT IS FORBIDDEN TO USE PRODUCTS OTHER THAN THOSE INDICATED BY THE MANUFACTURER **(SEE PAR. 5.8)**.
4) IT IS FORBIDDEN TO HANG ANY OBJECT ON THE CIRCULATOR.

INFORMATION

THE MANUFACTURER DISCLAIMS ANY LIABILITY FOR DAMAGE TO PEOPLE, PETS AND/OR PROPERTY CAUSED BY IMPROPER OR INCORRECT USE.

5.4 DIMENSIONS

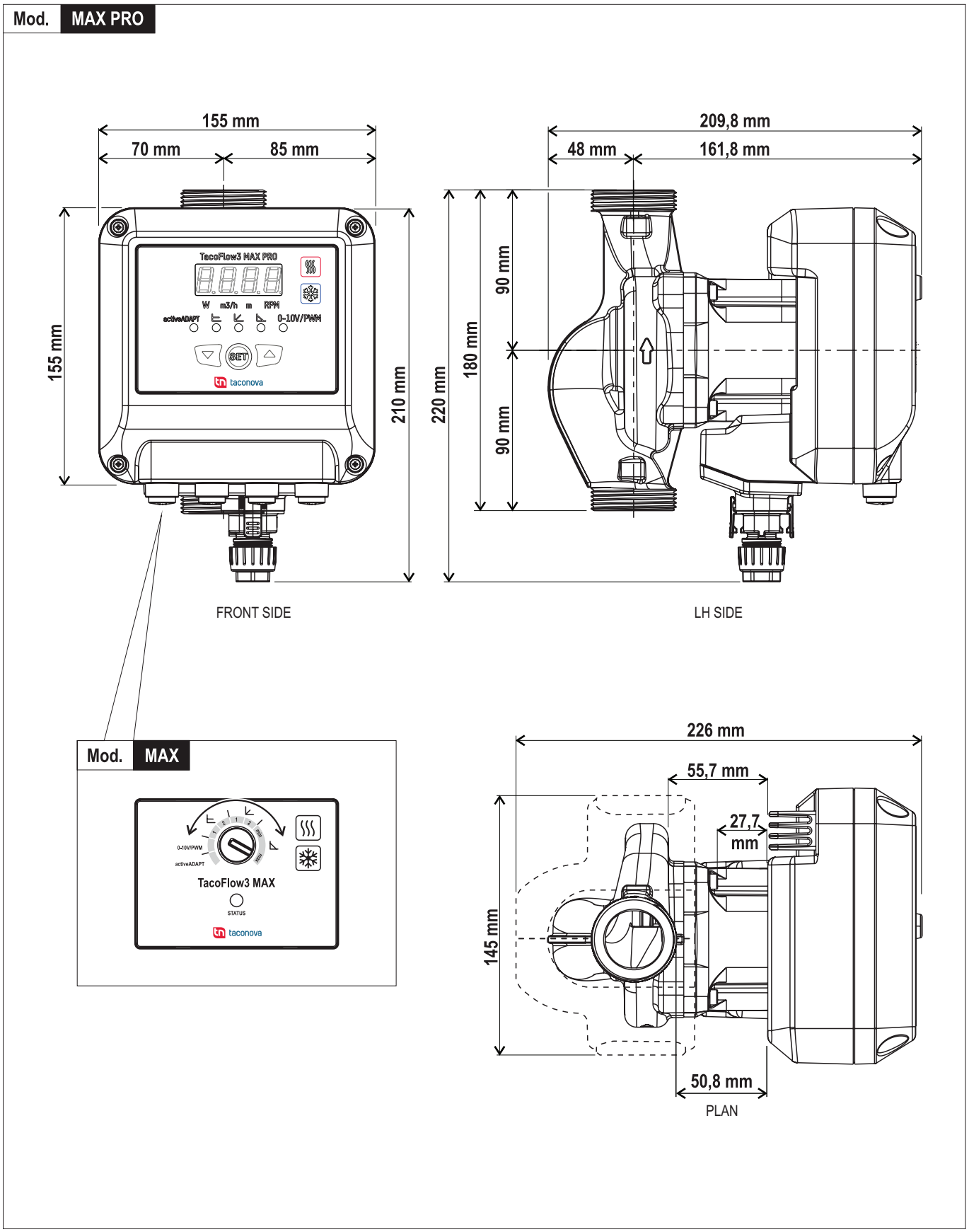

FIG. 2 *(Dimensions)*

5.5 LIMITS OF USE AND TECHNICAL DATA

Power supply voltage	*VAC*	230
Power supply frequency	*Hz*	50
Insulation class		H
Degree of protection	*IP*	44
Appliance class		II
Ambient temperature (MIN - MAX)	*°C*	+0 -+40
Liquid temperature	*°C*	-10 to +110
MAX Relative humidity conditions	*%*	≤ 95
MAX operating pressure	*bar/MPa*	10 / 1.0
Suction inlet pressure (1) with liquid temp. 50°C	*bar/MPa*	0.3 / 0.03
Suction inlet pressure (1) with liquid temp. 95°C	*bar/MPa*	1.0 / 0.10
Suction inlet pressure (1) with liquid temp. 110°C	*bar/MPa*	1.5 / 0.15
Specific EEI (2)	*IEE*	≤ 0.22
Mass	*kg*	3.5

(1) To avoid cavitation noise, the minimum pressures on the suction inlet must be strictly complied with.
(2) The most efficient reference parameter is EEI ≤ 0.20

TAB. 7 *(Limits of use and technical data)*

5.6 SOURCE OF ENERGY SUPPLY

The circulator is powered by the following energy source:
Single-phase electric current 230 VAC – 50 Hz.

5.7 EMISSIONS

5.7.1 SOUND PRESSURE

The maximum sound pressure level emitted by the pump when in operation is **<43 dB(A)**.

5.8 SUITABLE LIQUIDS FOR PUMPING

Types of liquids	Features
Liquids	Clean, non-aggressive and non-explosive, with no solid particles, fibres or mineral oils
Liquids in the heating systems	Water according to VDI 2035 Mixture of water and glycol with percentages that are not higher than 30%

TAB. 8 *(Suitable liquids for pumping)*

⚠ WARNING

IT IS FORBIDDEN TO USE LIQUIDS OTHER THAN THOSE INTENDED BY THE MANUFACTURER.

⚠ WARNING

IT IS MANDATORY FOR THE AUTHORISED OPERATORS TO READ AND BE CERTAIN TO HAVE UNDERSTOOD ALL PARTS OF ANY SAFETY DATA SHEETS PROVIDED BY THE PRODUCERS OF THE LIQUIDS USED.

5.9 OPERATING TEMPERATURE

Ambient temperature (°C)	0	10	20	30	35	40
Liquid temperature **MIN to MAX (°C)**	-10 to 110	10 to 110	20 to 110	30 to 110	35 to 90	40 to 70

TAB. 9 *(Operating temperature)*

5.10 NAME OF THE MAIN COMPONENTS

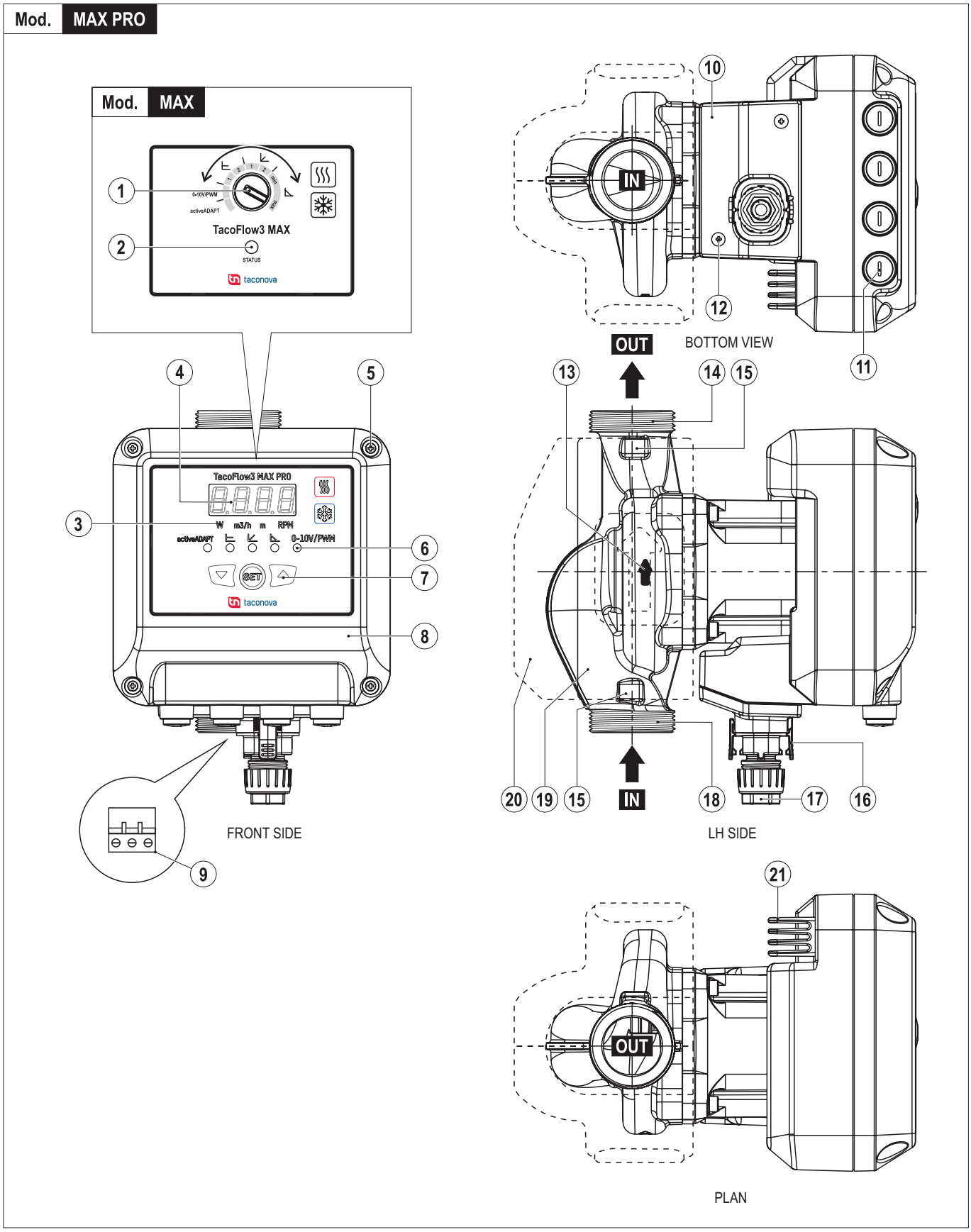

FIG. 3 *(Name of the main components)*

Ref.	Name	Main functions
1	Curve selector (MAX Mod.)	Selects the desired performance curve
2	LED indicator (MAX Mod.)	indicates the various operating phases with different colours
3	Selected reading LED (orange)	On indicates the selected reading: • **W =** Absorbed electrical power • **m3/h =** Estimated flow • **m =** Estimated head • **RPM =** Speed
4	Display (4 green digits)	Displays the state of the pump and the value of the selected reading
5	Motor cover screws	They secure the cover to the container (ø3x25 mm - 1.05 Nm ± 0.15 Nm)
6	State LED	It indicates the operating state of the circulator **(see par. 5.12.1)**
7	Selection buttons **DOWN** - **UP** - **"SET"**	They select and confirm the desired value
8	Motor cover	Covers the electric motor
9	Electrical connector	Allows the electrical power cables to be connected
10	Power connection cover	It holds the plug&play connector
11	Signal output caps	Signal output hole protection
12	Power connection cover screws	They secure the cover to the container (N. 2 - M3x25 mm - 0.5 Nm ± 0.1 Nm)
13	Arrow	Indicates the direction of rotation of the circulator and the direction of the liquid
14	Delivery connection	Allows connection to the delivery pipe
15	Spanner seats	Allows the spanner to be inserted to secure the pipes
16	Quick connector	Connects the power cable to the circulator
17	Cable gland	Blocks the power cable to the connector
18	Suction connection	Allows connection to the suction pipe
19	Circulator body	Conveys the liquid
20	Insulating shells	They limit the heat loss from the circulator body
21	Heat sink	Allows the electric motor to cool down

TAB. 10 *(Name of the main components)*

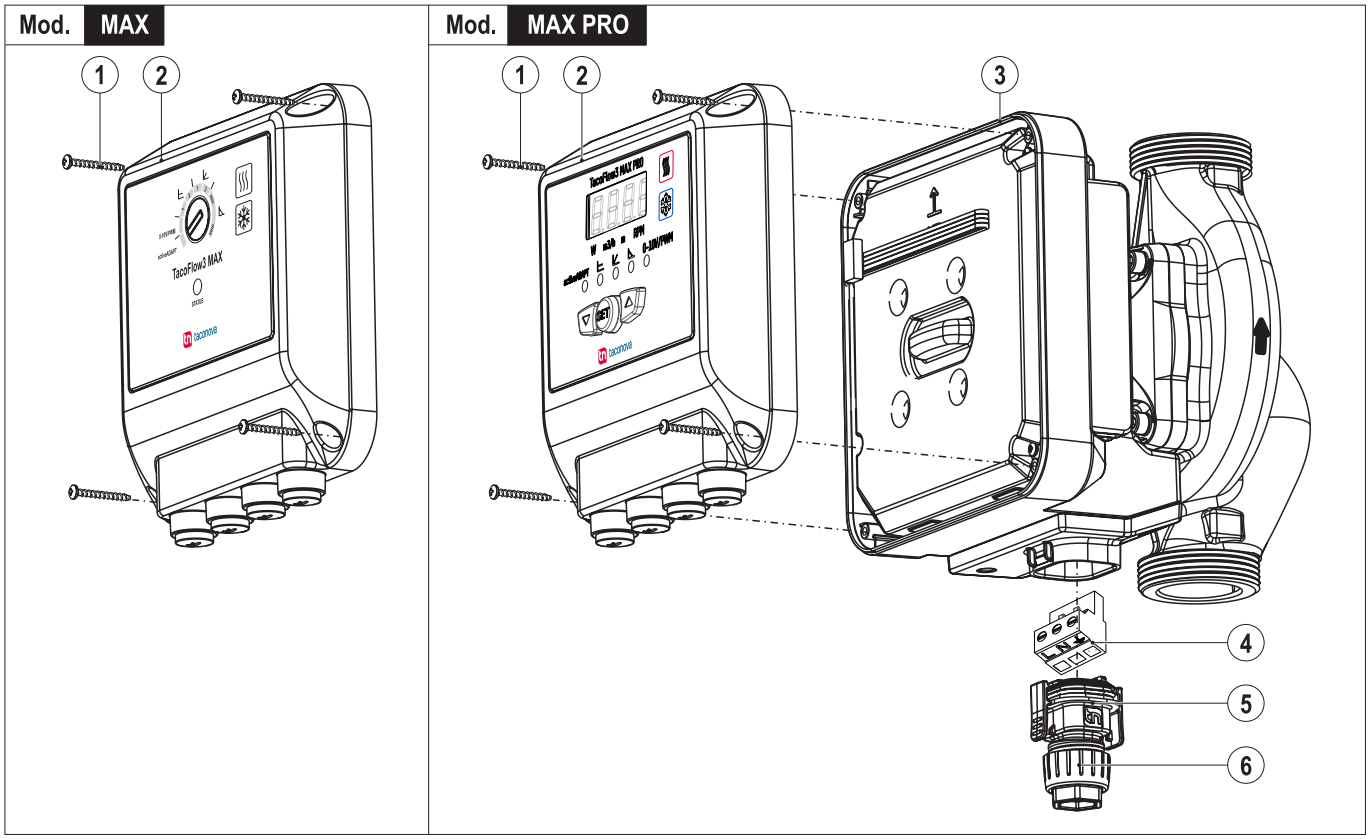

FIG. 4 *(Name of the main components)*

Ref.	Name	Main functions
1	Motor cover screws	They secure the cover to the container (N. 4 - 3x25 mm - 1.05 Nm ± 0.15 Nm)
2	Control shell unit	It houses the circulator control board
3	Power shell unit	Contains the power electronic board
4	Connector (L - N - ⏚)	Connects the power cables
5	Quick connector	Connects the power cable to the circulator
6	Cable gland	Blocks the power cable to the connector

TAB. 11 *(Name of the main components)*

5.11 COMMAND AND CONTROL DEVICE MAX PRO MOD.

Mod. **MAX PRO**

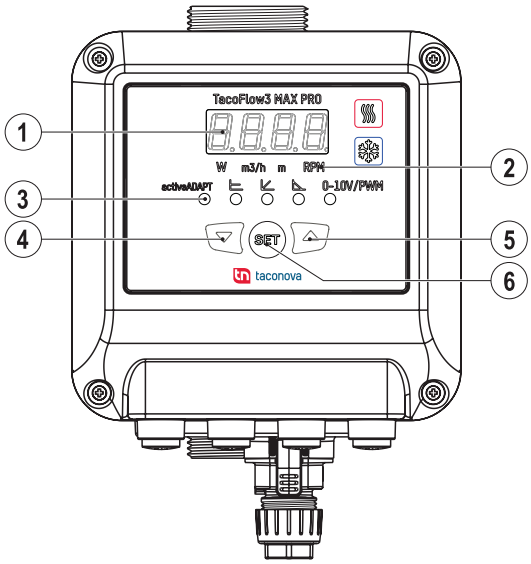

FRONT SIDE

Ref.	Name	Main functions
1	Display (4 green digits)	Displays the state of the pump and the value of the selected reading
2	Selected reading LED (orange)	On indicates the selected reading: • **W =** Absorbed electrical power • **m3/h =** Estimated flow • **m =** Estimated head • **RPM =** Speed
3	State LED	It indicates the operating state of the circulator **(see par. 5.12.1)**
4	DOWN button	They select the desired value
5	UP button	
6	**SET** button	Confirms the desired value

TAB. 12 *(Command and control device MAX PRO mod.)*

5.12 COMMAND AND CONTROL DEVICE MAX MOD.

Mod. **MAX**

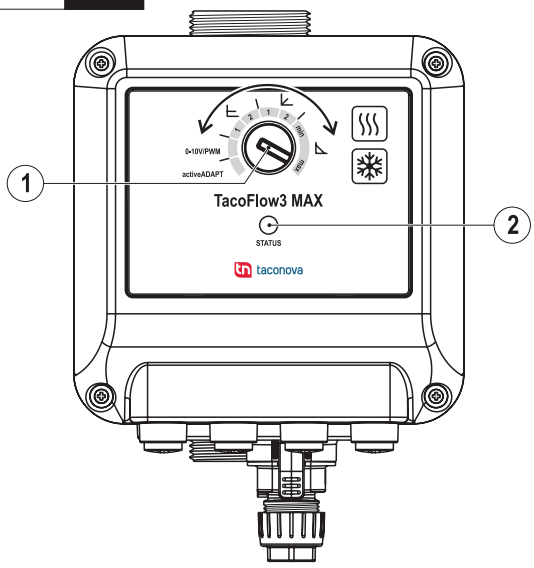

FRONT SIDE

Ref.	Name	Main functions
1	Curve selector	Selects the desired performance curve (the selector rotates 270°).
2	LED indicator	It indicates the operating state of the circulator **(see par. 5.12.1)**

TAB. 13 *(Command and control device MAX mod.)*

INFORMATION
THE GRAPHS OF THE PERFORMANCE/CONSUMPTION CURVES FOR EVERY PUMP SIZE ARE SHOWN ON THE WWW.TACONOVA.COM WEBSITE.

5.12.1 OPERATING MODE MAX AND MAX PRO MOD.

LED	Colour	Description
ActiveADAPT	Purple	The activeADAPT program allows the circulator to adapt its performance to the system requirements during short control intervals within a defined regulation area. • It improves the hydraulic balance of the system • Guarantees optimal performance during periods of partial load, e.g. at night • Enables quick configuration
C	Orange	**Mode C - Constant pressure difference** The circulator maintains constant head (pressure), regardless of the system heat demand (flow rate)
P	Green	**Mode P - Proportional pressure difference** The head (pressure) of the circulator decreases proportionally to the decrease of the system heat demand (reduction in the flow rate) and increases proportionally to the increase of the system heat demand (increase in the flow rate)
min-max	Blue	**Min-max - fixed speed mode** The circulator maintains a fixed speed, regardless of the system heat demand (flow rate). The speed is adjusted by gradually positioning the selector at any point between the min and max positions. If the performance is insufficient, gradually increase the value or if noise is generated due to the speed of the pumped fluid, gradually decrease the calibration
	Yellow	**0-10V/PWM** Analogue signal output External pump setpoint
air	White flashing slowly	Automatic detection of the presence of air in the system. Vent the system
	Red	Alarm **(see chap. 13)**
READING SETTING (MAX PRO Mod.)		
“W”	Orange	Absorbed electrical power
“m3/h”	Orange	Estimated flow
“m”	Orange	Estimated head
“RPM”	Orange	Speed
To select the desired reading, press the **DOWN** and UP buttons, and the orange LED of the selected reading will light up.		

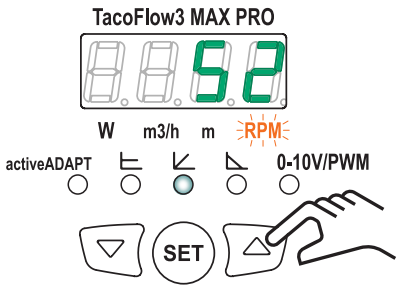

TAB. 14 *(Operating mode MAX and MAX PRO mod.)*

INFORMATION
TO SET THE OPERATING MODE SEE **PAR. 12.2.2**.

6 GUARDS AND PROTECTIVE DEVICES

6.1 NAME AND FUNCTIONS

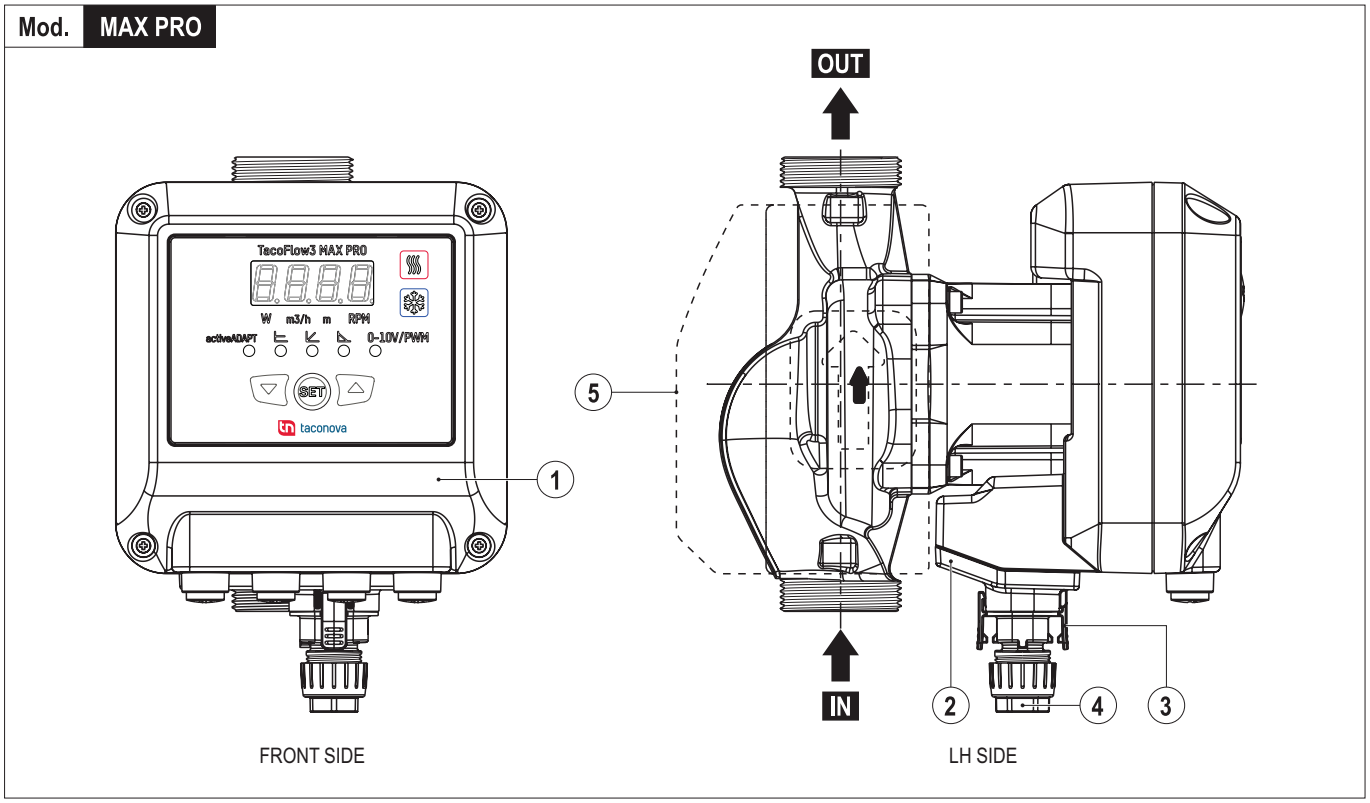

FIG. 5 *(Guards and protective devices)*

Ref.	Name	Main functions
1	Motor cover	Covers the electric motor
2	Power connection cover	It holds the plug&play connector
3	Quick connector	Connects the power cable to the circulator
4	Cable gland	Blocks the power cable to the connector
5	Insulating shells	They limit the heat loss from the circulator body

TAB. 15 *(Guards and protective devices)*

⚠ DANGER

IT IS FORBIDDEN TO NEUTRALISE, TAMPER WITH, MANIPULATE OR BYPASS THE GUARDS AND PROTECTIVE DEVICES INSTALLED IN THE CIRCULATOR.

IT IS FORBIDDEN TO REPLACE ANY SAFETY DEVICE OR ONE OF ITS COMPONENTS WITH NON-ORIGINAL SPARE PARTS.

IT IS FORBIDDEN TO USE THE CIRCULATOR IN THE PRESENCE OF ANY TYPE OF ANOMALY.

⚠ WARNING

IT IS MANDATORY TO CONSTANTLY CHECK THAT ALL THE SAFETY DEVICES INSTALLED IN THE CIRCULATOR FUNCTION CORRECTLY.

IT IS MANDATORY TO PROMPTLY REPLACE ANY MALFUNCTIONING AND/OR DAMAGED SAFETY DEVICES.

IT IS MANDATORY TO REPORT ANY TYPE OF ANOMALY TO THE MANAGER AND WAIT FOR INSTRUCTIONS PRIOR TO USE.

INFORMATION

TO ORDER SPARE PARTS FOR GUARDS AND PROTECTIVE DEVICES **SEE CHAP. 16**.

⚠ ATTENTION

IT IS MANDATORY TO PERIODICALLY CHECK THE INTEGRITY AND EFFICIENCY OF THE GUARDS AND PROTECTIVE DEVICES.

7 RESIDUAL RISKS

The operator in charge is informed that although the Manufacturer has adopted all the technical construction measures possible to make the circulator safe, the residual risks described below persist.

⚠ DANGER

TO MINIMISE THE EXPOSURE TO RESIDUAL RISKS, IT IS FORBIDDEN TO USE THE CIRCULATOR IN AN INCORRECT WAY, OTHER THAN THE INTENDED USE INDICATED BY THE MANUFACTURER **(SEE PAR. 5.2)**.

IT IS MANDATORY TO WEAR THE PERSONAL PROTECTIVE EQUIPMENT **(SEE CHAP. 8)** INDICATED IN THIS MANUAL.

RESIDUAL RISK N. 1

THERE IS THE **RISK OF EJECTIONS** CAUSED BY LEAKING LIQUID FROM THE FITTINGS IF THE AUTHORISED OPERATORS USE THE CIRCULATOR INCORRECTLY **(SEE PAR. 5.2)** AND DO NOT COMPLY WITH THE FOLLOWING REQUIREMENTS:

- OBLIGATION TO WEAR THE REQUIRED PPE **(SEE CHAP. 8)**.
- OBLIGATION TO RESPECT THE CORRECT USE AND MAINTENANCE PROCEDURES.

RESIDUAL RISK N. 2

THERE IS THE **RISK OF BURNS**CAUSED BY ACCIDENTAL CONTACT WITH THE HOT SURFACES IF THE AUTHORISED OPERATORS USE THE CIRCULATOR INCORRECTLY **(SEE PAR. 5.2)** AND DO NOT COMPLY WITH THE FOLLOWING REQUIREMENTS:

- OBLIGATION TO WEAR THE REQUIRED PPE **(SEE CHAP. 8)**.
- OBLIGATION TO RESPECT THE CORRECT USE AND MAINTENANCE PROCEDURES.

RESIDUAL RISK N. 3

THERE IS THE **RISK OF ELECTROCUTION**CAUSED BY ACCIDENTAL CONTACT WITH THE POWER CABLES IF THE AUTHORISED OPERATOR USES THE CIRCULATOR INCORRECTLY **(SEE PAR. 5.2)** AND DOES NOT COMPLY WITH THE FOLLOWING REQUIREMENTS:

- OBLIGATION TO WEAR THE REQUIRED PPE **(SEE CHAP. 8)**.
- OBLIGATION TO RESPECT THE CORRECT USE AND MAINTENANCE PROCEDURES.

8 PERSONAL PROTECTIVE EQUIPMENT (PPE)

It is mandatory to use Personal Protective Equipment (PPE), in compliance with the laws on health and safety in the workplace in the country of use of the circulator.
The employer and authorised operators must know and apply the obligations and duties set forth by the above mentioned legislation.

Sign	Mandatory PPE for all authorised operators
	Hand protection (protective gloves)
	Foot protection (non-slip shoes with reinforced toe)
	Body protection (protective clothing)
	Face protection (protective shield), if necessary

TAB. 16 *(Personal Protective Equipment - PPE)*

9 TRANSPORT AND HANDLING

Generally, the circulator is transported to the client by the Manufacturer or by a “specialised transport company” which, through its own personnel and adequate means and in compliance with current regulations, guarantees the loading, transport and unloading operations relating to the type of transport (by land, by sea or by air).

9.1 PACKAGING AND PACKAGING CONTENTS

Generally, the circulator is delivered assembled and fitted in a cardboard box.

Parts of the circulator	
1 Circulator	1 Connector (L - N - ⏚)
2 Gaskets	1 Quick installation guide
2 Insulating shells	

TAB. 17 *(Packaging and packaging contents)*

9.2 UNPACKING

Proceed as follows to unpack:
1) Open the packaging and remove the circulator
2) Check the packaging contents **(see par. 9.1)**

INFORMATION

IF COMPONENTS OR ACCESSORIES ARE MISSING, CONTACT THE MANUFACTURER **(SEE CHAP. 1)**.

IF THE CIRCULATOR COMPONENTS SHOW DAMAGE OR ANOMALIES, CONTACT THE MANUFACTURER AND DO NOT USE IT.

⚠ ATTENTION

IT IS MANDATORY TO DISPOSE OF THE PACKAGING ACCORDING TO THE VARIOUS TYPES OF MATERIAL IN STRICT COMPLIANCE WITH THE LAWS IN FORCE IN THE COUNTRY OF USE.

⚠ DANGER

IT IS FORBIDDEN TO HANDLE THE CIRCULATOR BY GRASPING THE HEAT SINK **(FIG. 6 - REF. 1)**: THE ELECTRONIC BOARD CAN BE DAMAGED.

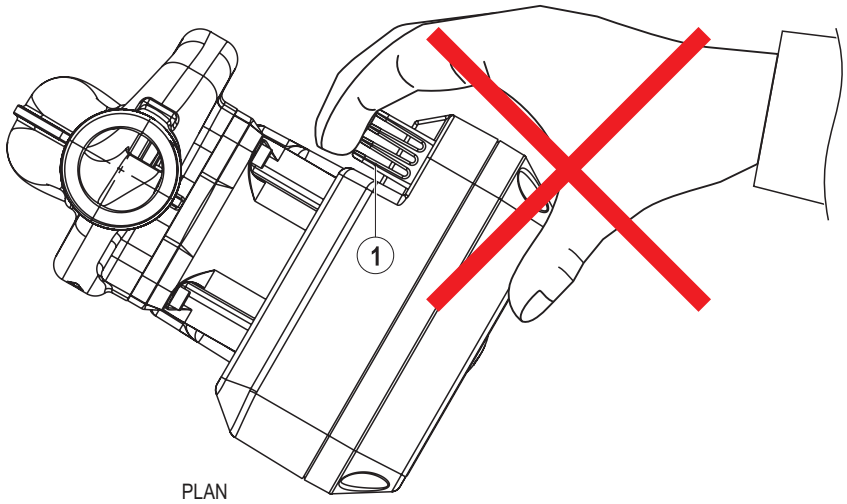

FIG. 6 *(It is forbidden to handle the circulator by grasping the heat sink)*

10 STORAGE

If the circulator must be left unused for a long time, you must:
1) Check that the circulator is in the **safety state (see par. 5.1)**
2) Grease the mechanical parts
3) Clean the circulator
4) Protect the circulator with a sheet or other protective measure to prevent the accumulation of dust

⚠ ATTENTION

IT IS FORBIDDEN TO STORE THE CIRCULATOR LEAVING IT EXPOSED TO BAD WEATHER, SUNLIGHT AND DUST.

11 INSTALLATION

⚠ WARNING

THE INSTALLATION OF THE CIRCULATOR CAN ONLY BE CARRIED OUT BY THE MECHANICAL AND HYDRAULIC MAINTENANCE TECHNICIAN AND THE ELECTRICAL MAINTENANCE TECHNICIAN.

11.1 MOUNTING POSITIONS

⚠ WARNING

IT IS MANDATORY TO INSTALL THE CIRCULATOR WITH THE AXIS OF THE MOTOR SHAFT HORIZONTAL TO THE FLOOR.

THE CIRCULATOR MOUNTING POSITIONS REFER TO BOTH THE MAX MOD. AND THE MAX PRO MOD.

⚠ WARNING

IT IS FORBIDDEN TO MOUNT THE CIRCULATOR WITH THE QUICK CONNECTOR OF THE POWER CABLE UPWARDS.

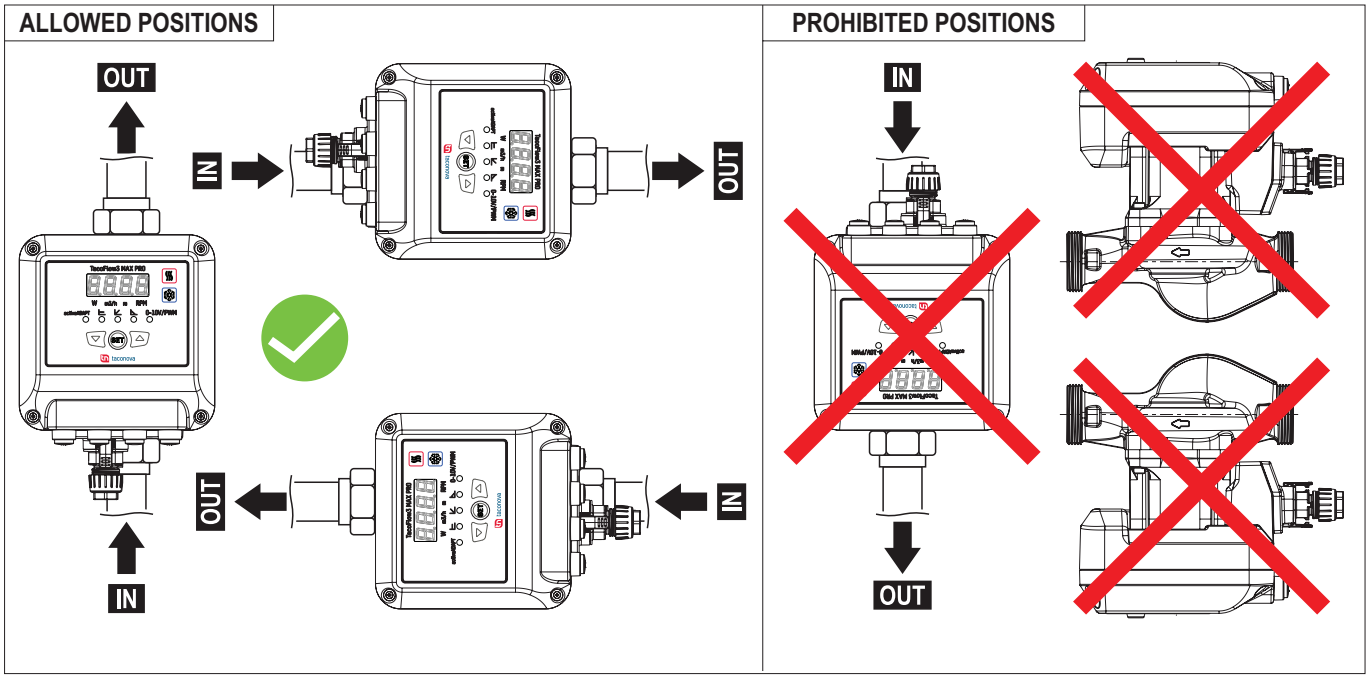

FIG. 7 *(Mounting positions)*

11.2 MOTOR BODY POSITIONS

INFORMATION

THE MOTOR BODY CAN BE ROTATED TO THE POSITIONS INDICATED IN **FIG. 8**.

THE MOTOR BODY POSITIONS REFER TO BOTH THE MAX MOD. AND THE MAX PRO MOD.

⚠ DANGER

IT IS MANDATORY TO CHECK THAT THE CIRCULATOR IS IN THE **SAFETY STATE** BEFORE PERFORMING MAINTENANCE OR ADJUSTMENTS. THERE ARE **RESIDUAL RISKS 1, 2 AND 3 (SEE CHAP. 8)**.

Adjust the motor body as follows:

1) Unscrew and remove the four motor cover screws **(FIG. 8 - Ref. 1)**

2) Rotate the motor cover **(FIG. 8 - Ref. 2)** to the desired position without removing it from the circulator body

3) Insert and tighten the four screws (the tightening torque must correspond to a value of 1.05 ± 0.15 Nm)

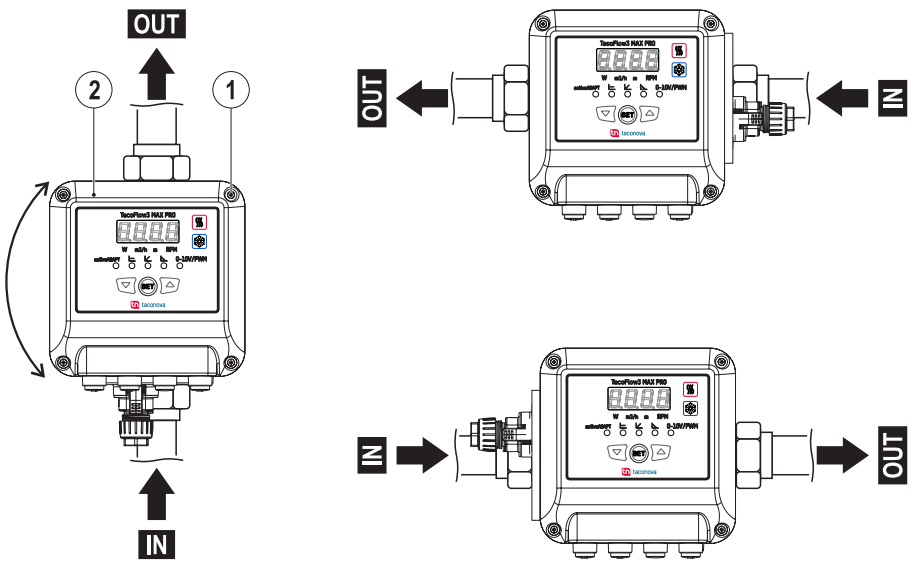

FIG. 8 *(Motor body positions)*

11.3 MOUNTING THE PIPES

1) Check the direction of the water flow indicated by the arrow on the circulator **(FIG. 9 - Ref. 1)**
2) Close the shut-off valves **(FIG. 9 - Ref. 2)**
3) Place the circulator on the pipes without creating tension and with the motor shaft positioned horizontally **(FIG. 9 - Ref. 3)**
4) Insert the gaskets **(FIG. 9 - Ref. 4)**
5) Tighten the pipe unions with adequate tools **(FIG. 9 - Ref. 5)** onto the circulator

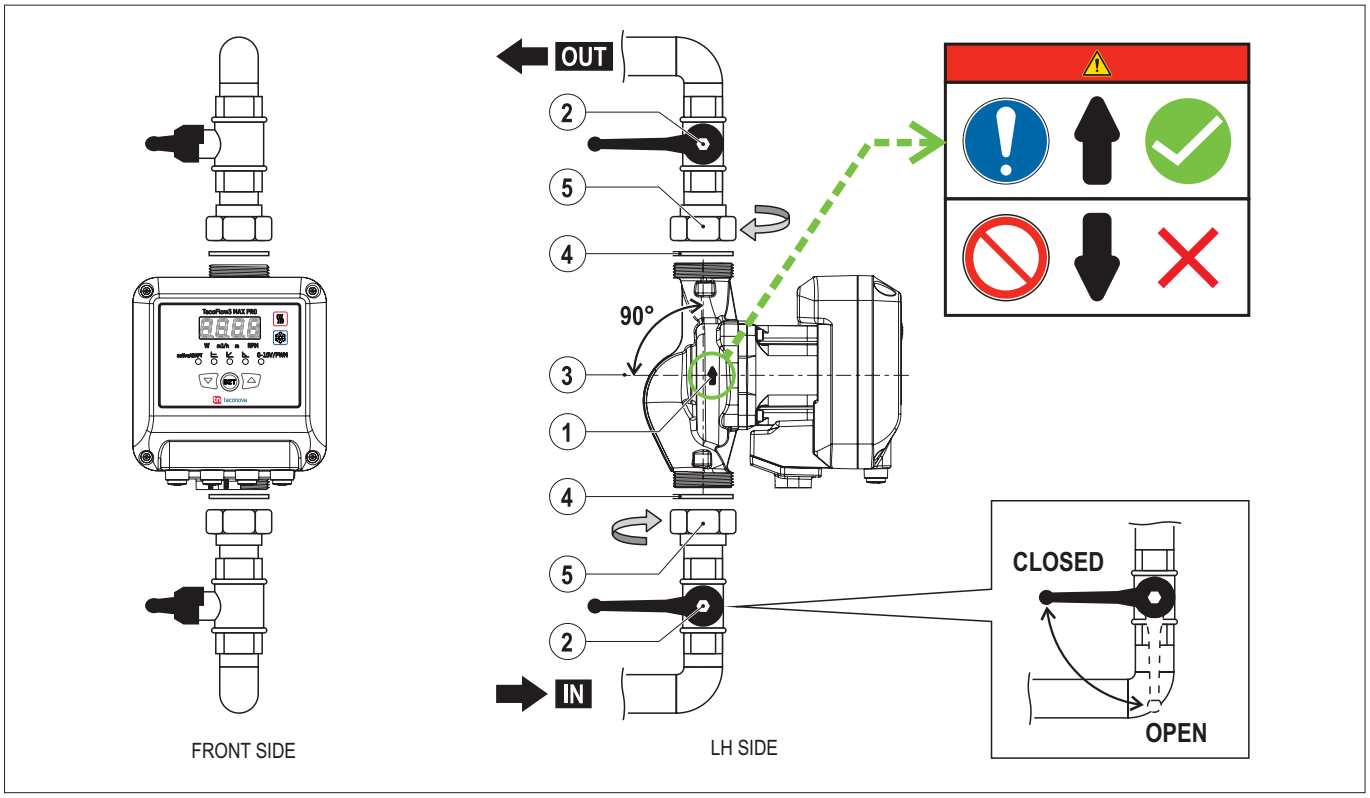

FIG. 9 *(Mounting the pipes)*

11.4 CIRCULATOR BODY INSULATION

INFORMATION
THERMAL INSULATION SHELLS CAN BE FITTED SO AS TO LIMIT THE HEAT LOSS FROM THE CIRCULATOR BODY **(FIG. 3 - REF. 12)**.

11.5 CONNECTION TO THE POWER SOURCE

⚠ DANGER

THE POWER LINE WHICH THE CIRCULATOR IS CONNECTED TO MUST CONFORM TO THE REQUIREMENTS SET FORTH IN THE LAW IN FORCE IN THE COUNTRY OF USE, AND BE FITTED WITH A SUITABLE "EARTHING" SYSTEM AND A RESIDUAL CURRENT DEVICE, WHICH DISCONNECTS THE POWER SUPPLY IF THE EARTH LEAKAGE CURRENT EXCEEDS **30 mA** FOR **30 ms**, OR AN ISOLATION DEVICE ADEQUATE FOR THE MAX ABSORBED POWER **(SEE PAR. 5.5)**.

IT IS MANDATORY TO VERIFY THAT THE CHARACTERISTICS OF THE MAINS (VOLTAGE, PHASES, FREQUENCY, POWER) ARE COMPATIBLE WITH THE CIRCULATOR **(SEE PAR. 5.5)**.

⚠ WARNING

THE CIRCULATOR MUST BE FITTED WITH A GENERAL ELECTRIC SWITCH (INSTALLED BY THE CLIENT) OR WITH A PLUG CONNECTED TO THE POWER CABLE THAT GUARANTEES THE DISCONNECTION OF THE POWER IN CASE OF MAINTENANCE OR SHUTDOWN.

THE ELECTRICAL CONNECTION OF THE CIRCULATOR TO THE MAINS IS SOLELY CARRIED OUT BY THE AUTHORISED OPERATOR, IN STRICT COMPLIANCE WITH THE PROJECT DATA.

IT IS MANDATORY TO USE A SUITABLE CABLE FOR THE REQUIRED ELECTRICAL CHARACTERISTICS **(FIG. 10 - REF. 1)**.

CORRECT ROTATION IS INDICATED BY THE ARROW ON THE CIRCULATOR BODY.

⚠ WARNING

ANY TYPE OF ELECTRICAL MATERIAL USED FOR THE CONNECTION MUST BE SUITABLE FOR THE USE, BEAR THE CE MARKING (IF SUBJECT TO THE LOW VOLTAGE DIRECTIVE 2014/35/EU) AND CONFORM TO THE REQUIREMENTS SET FORTH IN THE REGULATIONS IN FORCE IN THE COUNTRY OF USE OF THE CIRCULATOR.

⚠ ATTENTION

THE MANUFACTURER DECLINES ANY LIABILITY FOR OPERATING FAULTS OR ANOMALIES OF THE CIRCULATOR CAUSED BY VOLTAGE FLUCTUATIONS THAT EXCEED THE TOLERANCES INDICATED BY THE DISTRIBUTOR BODY (VOLTAGE ±10% - FREQUENCY ±2%).

Proceed as follows to connect the circulator to the power source:

1) Use a cable **(FIG. 10 - Ref. 1)** with the features indicated in **FIG. 10**
2) Connect the blue wire (neutral) to terminal N **(FIG. 10 - Ref. 2)**
3) Connect the black or brown wire (phase) to terminal L **(FIG. 10 - Ref. 3)**
4) Connect the yellow/green wire (earth) to terminal G **(FIG. 10 - Ref. 4)**
5) Connect the terminal board in the appropriate seat
6) Tighten the cable gland manually (MAX tightening torque 2 Nm)
7) Remove the protective label
8) Insert the plug&play connector on the pump until both hooks click
9) Enable the voltage and check the connection by the LED **(FIG. 10 - Ref. 5)** on the **MAX mod.** and the display **(FIG. 10 - Ref. 6)** on the **MAX PRO mod.** turning on

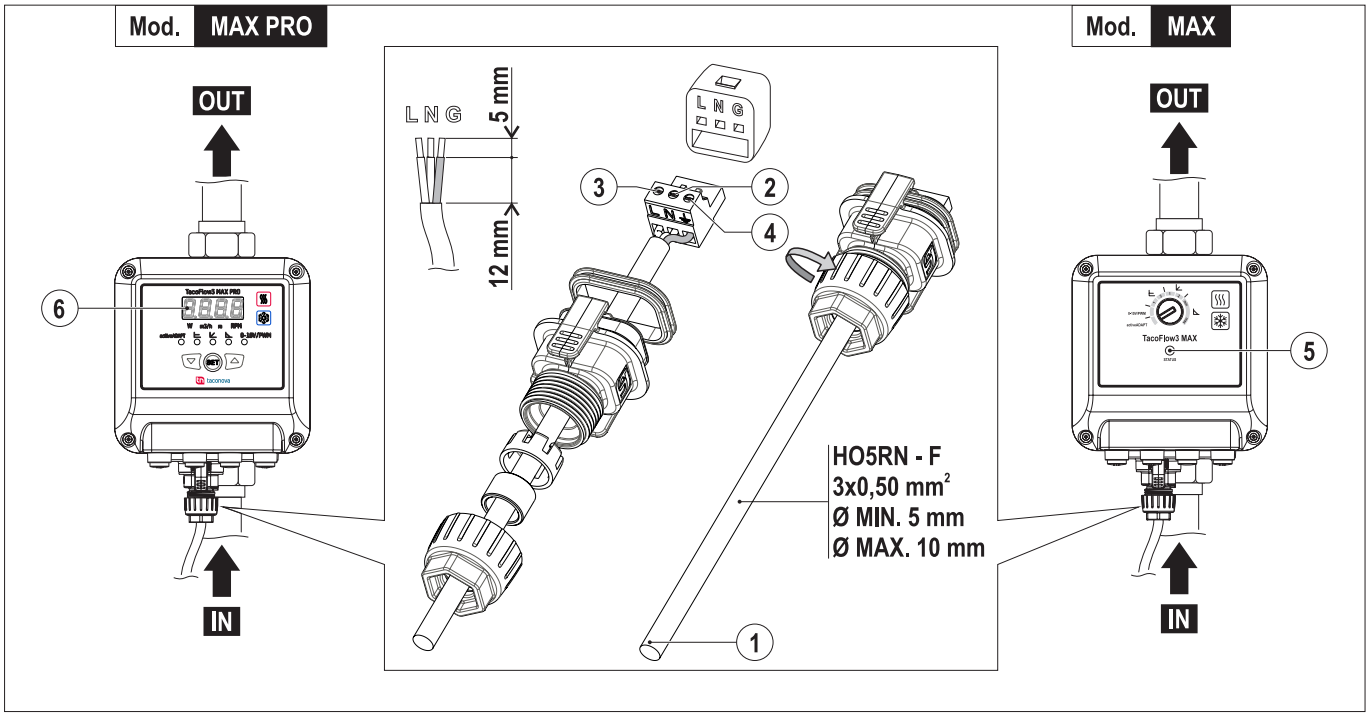

FIG. 10 *(Connection to the power source)*

12 USING THE CIRCULATOR

12.1 CHECKS AND OPERATIONS BEFORE START-UP

⚠ DANGER

BEFORE USING THE CIRCULATOR, IT IS MANDATORY FOR THE AUTHORISED OPERATORS TO READ AND BE CERTAIN TO HAVE UNDERSTOOD ALL THE PARTS OF THIS MANUAL.

⚠ WARNING

IT IS MANDATORY TO PERFORM THE FOLLOWING CHECKS AND OPERATIONS BEFORE STARTING THE CIRCULATOR.

Ref.	Checks and operations
1	Make sure there are no unauthorised people near the circulator
2	Make sure that all parts of the circulator are intact
3	Make sure the guards and protective devices are intact and function correctly **chap. 6**
4	Check that the shut-off valves are open
5	Check that the system is pressurised
6	Check the condition of the power cable
7	Obtain the mandatory personal protective equipment (PPE) **(see chap. 8)**
8	Make sure you have understood the correct installation procedure

TAB. 18 *(Checks and operations before start-up)*

12.2 START-UP

⚠ DANGER

BEFORE STARTING THE CIRCULATOR, IT IS MANDATORY TO READ AND BE CERTAIN TO HAVE UNDERSTOOD ALL THE PARTS OF THIS MANUAL.

⚠ WARNING

IT IS MANDATORY TO PERFORM THE CHECKS OF THE **PAR. 12.1** BEFORE EVERY START-UP OF THE CIRCULATOR.

1) Energise the circulator by turning the main switch (installed by the Client) to **Pos. I** or by inserting the plug into a suitable electrical socket
2) Check that the LED lights up on the circulator

12.2.1 VENTING THE SYSTEM

At start-up, the circulator can be noisy due to air in the system.
Air in the system is indicated by the white LED turning on and flashing (in the **MAX PRO Mod.** the operating status LED turns white) **(see par. 5.12.1)**; vent the system.

⚠ WARNING

IT IS MANDATORY TO CARRY OUT VENTING OPERATIONS USING MANDATORY PPE. THERE ARE RESIDUAL RISKS 1 AND 2 **(SEE CHAP. 7)**.

1) Open the air vent valve in the hydraulic system above the circulator
2) Set the circulator to the Variable Power Curve function with MAX value. (100%)
3) Let the circulator run for a short time
4) After venting the system, the LED stops flashing and changes colour, set the circulator to the desired function

12.2.2 SETTING THE CIRCULATOR TO MAX PRO MOD.

Change the circulator performance (head) accordingly, using the **SET**, **DOWN** and **UP** buttons.

LED	Function	Setting
activeADAPT Purple (**)	ActiveADAPT (*)	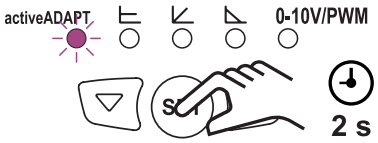 **1)** Press the **SET** button for **2 s**, the LED indicating the operating status starts to flash quickly.
C Orange (**)	Constant curve (C1 - C2 - C3 - C4 - C5)	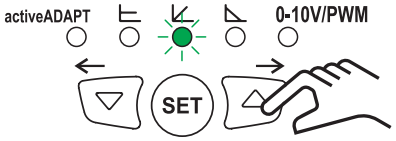 **2)** Press the **UP** or **DOWN** buttons to select the new operating mode and the desired value for the constant, proportional and variable power curves (see display below).
P Green (**)	Proportional curve (P1 - P2 - P3 - P4 - P5)	
min-max Blue (**)	MIN - MAX Variable Power Curve (0 to 100%)	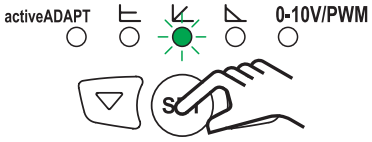 **3)** Press the **SET** button to confirm the desired operating mode and value.
0-10V/PWM Yellow (**)	0-10 V or PWM external input	

TacoFlow3 MAX PRO	TacoFlow3 MAX PRO	TacoFlow3 MAX PRO
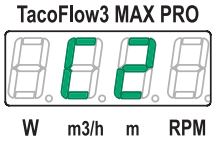	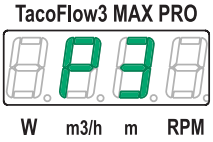	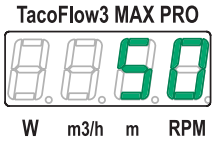
Constant curve (C1 - C2 - C3 - C4 - C5)	Proportional curve (P1 - P2 - P3 - P4 - P5)	MIN - MAX Variable Power Curve (0 to 100%)

(*) *Default Setting*
(**) *It turns white to indicate there is air in the system or red to indicate there is an error*

TAB. 19 *(Setting the circulator to MAX PRO mod.)*

12.2.3 SETTING THE CIRCULATOR TO MAX MOD.

Change the circulator performance (head) accordingly by rotating the selector with the suitable tool. The selection of the correct operating curve depends on the system characteristics and on the system heat demand.

LED	Position	Function
activeADAPT Purple (**)	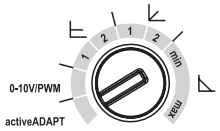	ActiveADAPT (*)
0-10V/PWM Yellow (**)	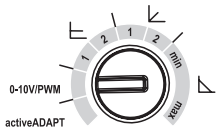	010 V or PWM external input
C Orange (**)	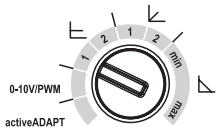	Lower Constant Curve CI
	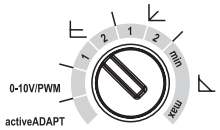	Intermediate Constant Curve CII
P Green (**)	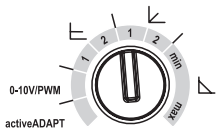	Lower Proportional Curve P1
	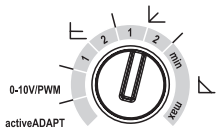	Intermediate Proportional Curve P2
min-max Blue (**)	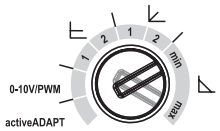	MIN - MAX Variable Power Curve (0 to 100%)

(*) *Default Setting*
(**) *It turns white to indicate there is air in the system or red to indicate there is an error*

TAB. 20 *(Setting the circulator to MAX mod.)*

12.3 EXTERNAL CONNECTION FOR 0-10 V / PWM SIGNAL

⚠ WARNING

IT IS MANDATORY TO PERFORM THE FOLLOWING OPERATIONS IF AN EXTERNAL CONNECTION IS REQUIRED (PLC/PUMP CONTROLLER).

INFORMATION

CONNECTION INSTRUCTIONS VALID FOR BOTH THE MAX MOD. AND THE MAX PRO MOD.

1) Unscrew the four screws **(FIG. 11 - Ref. 1)** that secure the motor cover **(FIG. 11 - Ref. 2)**
2) Unscrew a signal output cap **(FIG. 11 - Ref. 3)**
3) Disconnect the connector **(FIG. 11 - Ref. 4)** from the electronic board **(FIG. 11 - Ref. 5)**
4) Insert the cable **(FIG. 11 - Ref. 6)** in the cable gland M12x1.5 **(FIG. 11 - Ref. 7)** (not supplied) and screw it to the cover
5) Strip (MIN 5 mm) the ends of the wires, insert them in the connector **(FIG. 11 - Ref. 4)** and secure them with the screws **(FIG. 11 - Ref. 8)**
6) Connect the connector to the electronic board, close the motor cover and secure it with the screws

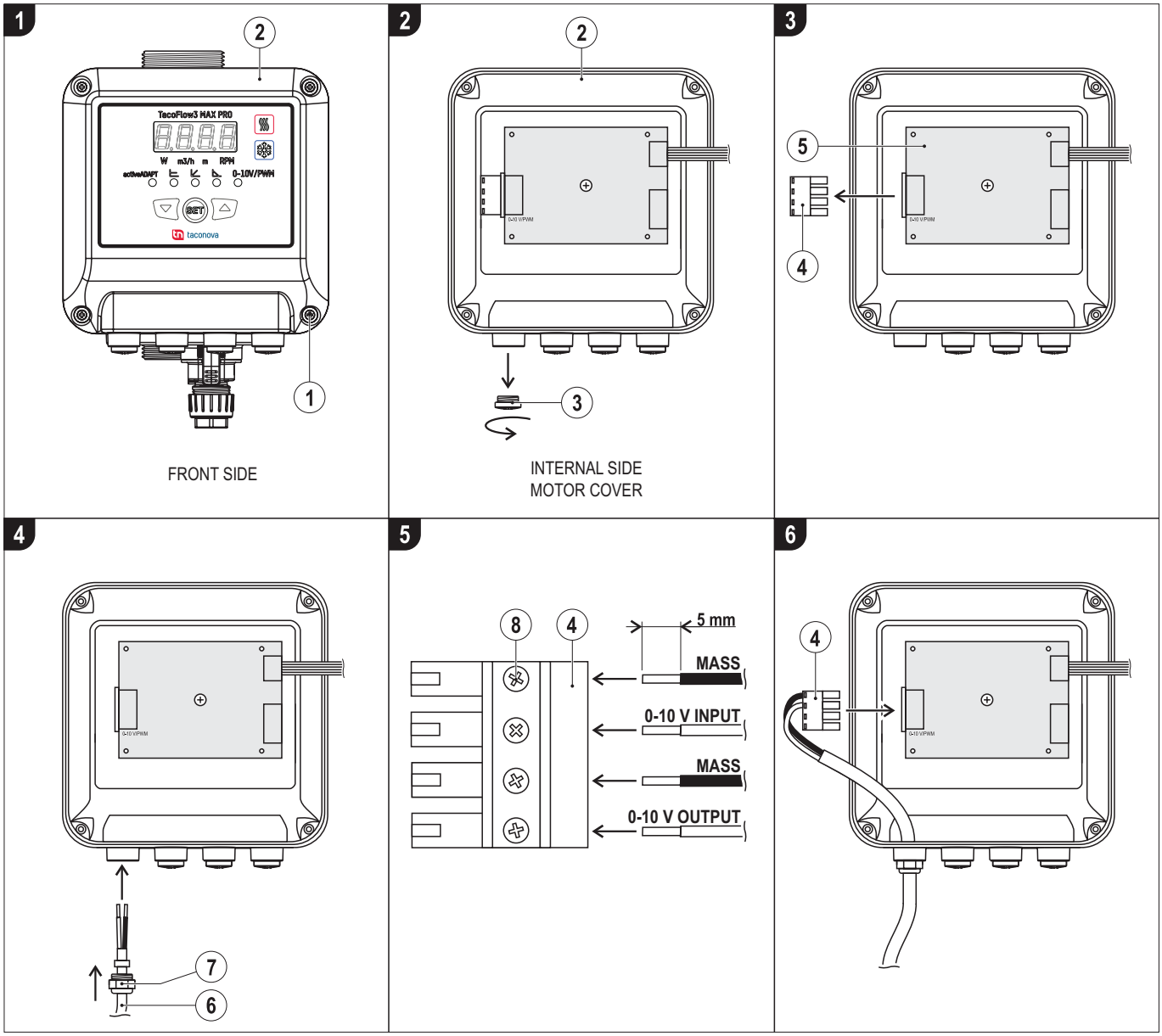

FIG. 11 *(External connection for 0-10 V / PWM signal)*

12.3.1 STANDBY MODE (MAX PRO MOD.)

In the operating mode with an external connection for the 0-10 V / PWM signal, the **Standby** mode is indicated by the yellow LED (flashing slowly) turning on and **Stb** appearing on the display **(see FIG. 12)**.

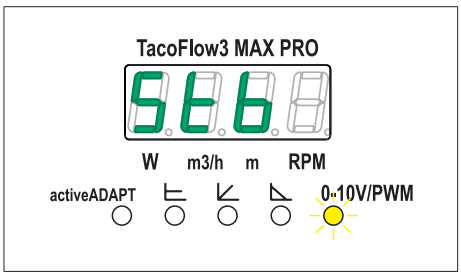

FIG. 12 *(Standby mode)*

12.3.2 ANALOGUE INPUT

In the **external input** mode, the circulator accepts a direct voltage signal or a PWM, indifferently. The type of signal is automatically selected by the circulator without the operator's intervention.

12.3.3 0-10V INPUT

The circulator operates at variable speed according to the DC input voltage.
The circulator goes into standby at a voltage lower than 1.5 V.
The circulator operates at a variable speed, between 2 and 10 V, according to the voltage:

- 0% for voltage lower than or equal to 2 V
- 50% at 6 V
- 100% for voltage higher than or equal to 10 V

Between 1.5 V and 2 V, the circulator can be in standby or at minimum speed depending on the previous state (hysteresis).

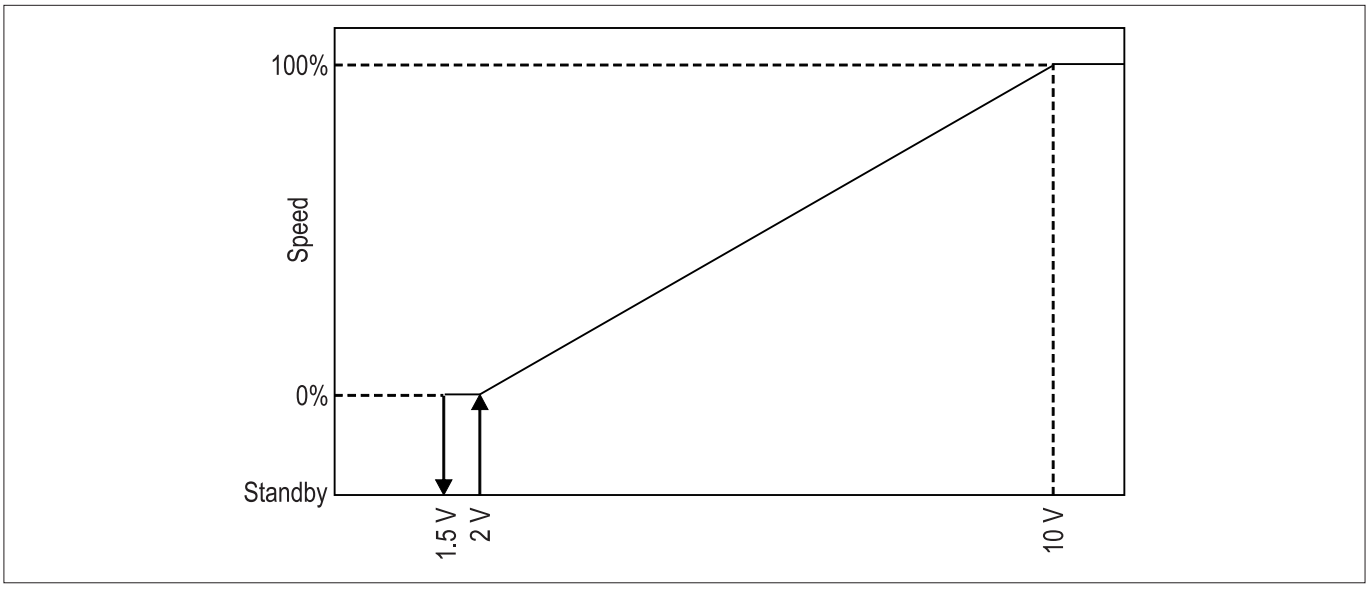

FIG. 13 *(Analogue input)*

INFORMATION
THE CIRCULATOR GOES ON STANDBY IF THE INPUT REMAINS DISCONNECTED.

12.3.4 PWM INPUT

The circulator operates at variable speed according to the input duty cycle.
The input signal must be a square wave with a frequency between 200 Hz and 5 kHz and an amplitude between 5 V and 12 V.

The circulator operates at variable speed with duty cycle between 0 and 98%:
- 0% with duty cycle less than 5%
- 50% with duty cycle equal to 50%
- 100% with duty cycle less than 95%

INFORMATION
WITH DUTY CYCLE EQUAL TO 100%, THE CIRCULATOR IS NOT ABLE TO RECOGNISE THE SIGNAL AS A PWM INPUT AND THEREFORE THE OPERATING SPEED DEPENDS ON THE INPUT VOLTAGE AS IN THE CASE OF 0-10 V INPUT.

12.3.5 ANALOGUE OUTPUT

The circulator has an analogue output to indicate the operating status and the presence of any errors.

Voltage	State
0 V	Circulator off, not powered
2 V	Circulator powered in standby
4 V	Circulator on and running
6 V	Warning presence (overheating, air)
10 V	Alarm presence (Blocked circulator, undervoltage, overtemperature)

TAB. 21 *(Analogue output)*

12.4 LIST OF ERRORS (MAX PRO MOD.)

The presence of errors is indicated by the LED turning on red (in the **MAX PRO Mod.** the operating status LED turns red) and by the **error code** on the display **(see TAB. 22)**.

Code	Meaning	Circulator state
E1	Pump locked / loss of step	Stopped
E2	Undervoltage	Stopped
E3	Overheating warning	Runs with limited power
E4	Overheating alarm	Stopped
E5	Interrupted communication with inverter board	Runs in recovery mode
E6	Incompatible SW error between pump boards	Runs in recovery mode

TAB. 22 *(Code and meaning of errors)*

12.4.1 TECHNICAL MENU (MAX PRO MOD.)

Proceed as follows to access the technical menu:
1) Press the **UP** and **DOWN** buttons simultaneously for **5 s** and **"tECH"** will appear on the display
2) Press the **SET** buttons and select the parameter to be displayed by pressing the **UP** or **DOWN (see TAB. 23)** buttons
3) Press the **SET** buttons to select the desired parameter

INFORMATION
AFTER **10 S** OF INACTIVITY, THE CIRCULATOR EXITS THE TECHNICAL MENU AND RESUMES NORMAL OPERATION.

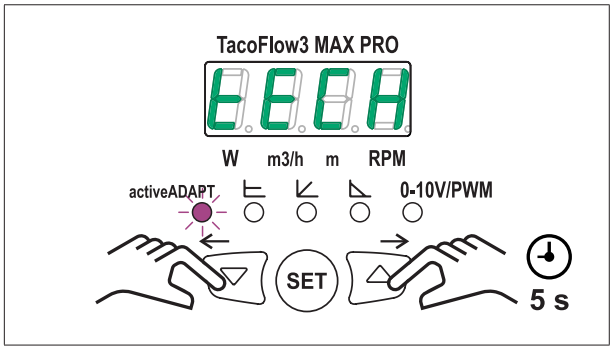

FIG. 14 *(Technical menu)*

Parameter	Meaning
T 0	Display Firmware Version
T 1	Inverter Firmware Version
T 2	Unit of measurement shown on the display: • SI = Système international (European) • IU = Imperial units (Anglo-Saxon)
T 3	Maximum head of the pump / model (60-80 or 100)
T 4	0-10 V analogue input voltage
T 5	PWM input duty cycle
T 6	Mains voltage
T 7	Inverter internal voltage
T 8	Pump operating hours (in thousands, 0.010 = 10 hours, 101.0 = 101000 hours)
T 9	Switch-on counter
T 10	Standby counter
T 11	Rotor blocks counter
T 12	Step loss counter
T 13	Undervoltage counter
T 14	Overvoltage counter
T 15	Failed internal board communication counter

TAB. 23 *(Technical menu parameters)*

12.5 SHUTDOWN

1) De-energise the circulator by turning the main switch (installed by the Client) to **Pos. 0**
2) Check that the LED goes off on the circulator

12.6 EMERGENCY STOP

In order to react to hazardous situations that may arise suddenly, authorised operators must:

1) De-energise the circulator by turning the main switch (installed by the Client) to **Pos. 0**
2) Check that the LED goes off on the circulator

⚠ DANGER

AFTER HAVING STOPPED THE CIRCULATOR AND HAVING INDICATED THE EMERGENCY TO THE MANAGER, IT IS MANDATORY TO STOP ANY INTERVENTION ON THE CIRCULATOR UNTIL THE MANAGER GIVES CONSENT.

⚠ DANGER

IT IS MANDATORY TO CHECK THAT THE CIRCULATOR IS IN THE **SAFETY STATE** BEFORE PERFORMING MAINTENANCE OR ADJUSTMENTS. THERE ARE **RESIDUAL RISKS 1, 2 AND 3 (SEE CHAP. 8)**.

12.6.1 RECOVERY AFTER AN EMERGENCY STOP

Having eliminated the causes of the emergency and having verified the absence of damage and/or anomalies on the line, obtain the consent of the Manager to proceed as follows:
1) Perform the checks before start-up **(see par. 12.1)**
2) Perform the start-up **(see par. 12.2)**

13 ANOMALIES: CAUSES AND REMEDIES

⚠ DANGER

IT IS FORBIDDEN TO USE THE CIRCULATOR IN THE PRESENCE OF ANY TYPE OF ANOMALY.

DURING MAINTENANCE IT IS FORBIDDEN TO LEAVE THE CIRCULATOR UNATTENDED AND WITHOUT PRECAUTIONS TO PREVENT ACCESS TO UNAUTHORISED PERSONS.

⚠ DANGER

IF THE MAINTENANCE TECHNICIANS CANNOT RESOLVE THE ANOMALY, THE MANUFACTURER MUST BE ASKED TO INTERVENE.

⚠ DANGER

ALL MAINTENANCE ON THE CIRCULATOR MUST BE PERFORMED WITH THE CIRCULATOR IN THE **SAFETY STATE (SEE PAR. 5.1)**.

Anomaly	LED indication	Causes	Remedies
1) The circulator is noisy	On	The suction pressure is insufficient - Cavitation	Increase the system input pressure within the allowable range **TAB. 20 - par. 12.2.3**
	On	Foreign bodies in the impeller	Check if there are foreign bodies inside the pumping body
2) Loud liquid circulation noise	White flashing light on	Air in the system	Vent the system
	On	The flow rate is too high	Reduce the rotation speed
3) The circulator does not start	Off	No power supply	Check the voltage of the electrical system. Check the connection of the circulator
		A system fuse is defective	Check the fuses and replace them, if necessary
		The circulator is defective	Replace the circulator
	Red flashing light on	Overtemperature	Wait for the circulator to cool and verify it restarts. Check that the liquid temperature and ambient temperature are within the ranges indicated in **TAB. 9 - par. 5.9**

TAB. 24 *(Anomalies: Causes and remedies)*

14 MAINTENANCE

14.1 GENERAL WARNINGS

⚠ DANGER

ALL MAINTENANCE ON THE CIRCULATOR MUST BE PERFORMED WITH THE CIRCULATOR IN THE **SAFETY STATE (SEE PAR. 5.1)**.

⚠ DANGER

AUTHORISED OPERATORS ARE FORBIDDEN FROM LEAVING THE CIRCULATOR UNATTENDED DURING MAINTENANCE WITHOUT IMPLEMENTING ALL THE PRECAUTIONS TO PREVENT ACCESS TO UNAUTHORISED PERSONS.

⚠ WARNING

AUTHORISED OPERATORS MUST ONLY PERFORM THE MAINTENANCE REQUIRED, ACCORDING TO THEIR SPECIFIC PROFESSIONAL SKILLS AND AS CONSENTED BY THE MANAGER.

⚠ WARNING

IT IS FORBIDDEN TO USE PRODUCTS OTHER THAN THOSE INTENDED BY THE MANUFACTURER **(SEE PAR. 5.8)**.

IT IS MANDATORY FOR THE AUTHORISED OPERATORS TO READ AND BE CERTAIN TO HAVE UNDERSTOOD ALL PARTS OF THE RELATIVE SAFETY DATA SHEETS PROVIDED BY THE PRODUCERS.

14.2 ROUTINE MAINTENANCE

Routine maintenance is a number of interventions intended to maintain the optimal conditions of use and operation of the circulator (adjustments, visual inspection, etc.) performed by the operator.
The circulator does not require any particular maintenance.

14.3 PERIODIC VERIFICATION OF THE EFFECTIVENESS OF THE GUARDS AND PROTECTIVE DEVICES

⚠ DANGER

IT IS FORBIDDEN TO NEUTRALISE, TAMPER WITH, MANIPULATE OR BYPASS THE GUARDS AND PROTECTIVE DEVICES INSTALLED IN THE CIRCULATOR.

IT IS FORBIDDEN TO REPLACE THE CIRCULATOR GUARDS OR PROTECTIVE DEVICES WITH NON-ORIGINAL SPARE PARTS.

⚠ WARNING

IT IS MANDATORY TO CONSTANTLY VERIFY THAT ALL THE GUARDS OR PROTECTIVE DEVICES FUNCTION CORRECTLY.

IT IS MANDATORY TO REPLACE INEFFECTIVE OR DAMAGED GUARDS OR PROTECTIVE DEVICES IN A TIMELY MANNER.

⚠ DANGER

ALL THE OPERATIONS TO CHECK THE INTEGRITY AND EFFECTIVENESS OF THE GUARDS AND PROTECTIVE DEVICES MUST BE CARRIED OUT BEFORE EVERY START-UP AND WITH THE CIRCULATOR IN THE **SAFETY STATE (SEE PAR. 5.1)**.

⚠ DANGER

DURING VERIFICATION IT IS FORBIDDEN TO LEAVE THE CIRCULATOR UNATTENDED AND WITHOUT PRECAUTIONS TO PREVENT ACCESS TO UNAUTHORISED PERSONS.

⚠ WARNING

ANY GUARDS AND PROTECTIVE DEVICES MUST ONLY BE REPLACED BY A

MAINTENANCE TECHNICIAN   OR BY A MANUFACTURER'S TECHNICIAN 

INFORMATION

SPARE PARTS SPECIFICATIONS AND ORDERING METHODS ARE DESCRIBED IN **CHAP. 16**.

14.4 EXTRAORDINARY MAINTENANCE

This is a number of activities carried out to maintain the conditions of use and operation of the line, through various types of intervention (adjustments, replacements, etc.), which must only be carried out by a qualified technician.

⚠ WARNING

EXTRAORDINARY MAINTENANCE CAN ONLY BE PERFORMED BY A QUALIFIED TECHNICIAN MADE AVAILABLE BY THE MANUFACTURER AND/OR BY THE SERVICE CENTRE.

15 INSTRUCTIONS FOR DECOMMISSIONING, DISMANTLING AND DISPOSAL

⚠ WARNING

IT IS FORBIDDEN TO DISPOSE OF LIQUIDS AND RESIDUAL OIL INTO THE ENVIRONMENT.

⚠ WARNING

ONLY DISPOSE OF THE PRODUCTS CONSIDERED TO BE POLLUTING AND HAZARDOUS BY COMMISSIONING AUTHORISED AND SPECIALISED FACILITIES FOR THE DIFFERENT TYPES OF PRODUCT.

SEPARATE THE PARTS THAT MAKE UP THE CIRCULATOR ACCORDING TO THE DIFFERENT TYPES OF CONSTRUCTION MATERIAL (PLASTIC, IRON, ETC.).

WHEN DEMOLISHING THE LINE, IT IS MANDATORY TO COMPLY WITH THE PROVISIONS OF THE CURRENT REGULATIONS.

⚠ ATTENTION

ALL COMPONENTS OF THE CIRCULATOR MUST BE IDENTIFIED ACCORDING TO THE DEFINITIONS OF THE “EWC CODES” (EUROPEAN WASTE CATALOGUE) AND DISPOSED OF BY COMMISSIONING AUTHORISED AND SPECIALISED FACILITIES, IN STRICT COMPLIANCE WITH THE REGULATIONS IN FORCE IN THE COUNTRY OF DEMOLITION.

⚠ ATTENTION

WASTE ELECTRICAL AND ELECTRONIC EQUIPMENT (WEEE) MUST BE DISPOSED OF IN STRICT COMPLIANCE WITH THE REGULATIONS IN FORCE IN THE COUNTRY WHERE THE LINE IS DEMOLISHED.

16 SPARE PARTS

16.1 ORDERING METHOD

⚠ ATTENTION

ORIGINAL ACCESSORIES AND SPARE PARTS FOR ANY REPLACEMENT MUST ONLY BE REQUESTED FROM THE MANUFACTURER OR THE SERVICE CENTRE.

17 ATTACHMENTS

17.1 DECLARATION OF DELIVERY OF THE INSTRUCTION MANUAL

IN ACCORDANCE WITH THE REQUIREMENTS OF THE LAWS ON HEALTH AMD SAFETY OF WORKERS IN THE WORKPLACE, THE EMPLOYER DECLARES TO HAVE PROVIDED THIS MANUAL TO THE AUTHORISED OPERATORS FOR CORRECT INFORMATION AND TRAINING ON USE AND MAINTENANCE OF THE LINE.

Authorised operators	Date	Signature for receipt
Mr.	......../......../........	....
Mr.	......../......../........	....
Mr.	......../......../........	....
Mr.	......../......../........	....
Mr.	......../......../........	....
Mr.	......../......../........	....
Mr.	......../......../........	....
Mr.	......../......../........	....
Mr.	......../......../........	....
Mr.	......../......../........	....
Mr.	......../......../........	....
Mr.	......../......../........	....
Mr.	......../......../........	....
Mr.	......../......../........	....
Mr.	......../......../........	....
Mr.	......../......../........	....
Mr.	......../......../........	....
Mr.	......../......../........	....
Mr.	......../......../........	....
Mr.	......../......../........	....
Mr.	......../......../........	....
Mr.	......../......../........	....
Mr.	......../......../........	....
Mr.	......../......../........	....
Mr.	......../......../........	....
Mr.	......../......../........	....

TAB. 25 *(Declaration of delivery of the instruction manual)*

(N.B. Before completing the table, it is advisable to photocopy it for future reference).

taconova
comfort solutions

Taconova reserves the right to make changes without prior notice.

Taconova Group AG
Neunbrunnenstrasse 40 | CH-8050 Zürich
T +41 44 735 55 55 | F +41 44 735 55 02 | info@taconova.com

Taconova GmbH
Rudolf-Diesel-Straße 8 | DE-78224 Singen
T +49 7731 98 28 80 | F +49 7731 98 28 88 | deutschland@taconova.com

Taconova Group AG
Kostelecká 879/59 | CZ-196 00 Praha 9-Čakovice
T +420 283 930 810 | F +420 266 310 386 | cesko-slovensko@taconova.com

Taconova Polska Sp z.o.o
ul.Trójpole 3 | 61-693 Poznań, Polska
T +48 61 227 84 21 | polska@taconova.com

TACO ITALIA S.r.L.
Via Galileo Galilei, 89/91 | IT-36066 Sandrigo (VI)
T +39 0444 666800 | F +39 0444 666801 | info@tacoitalia.com | tacoitalia.com

Taco Family of Companies