TACOSOL CIRC ER HE - SG

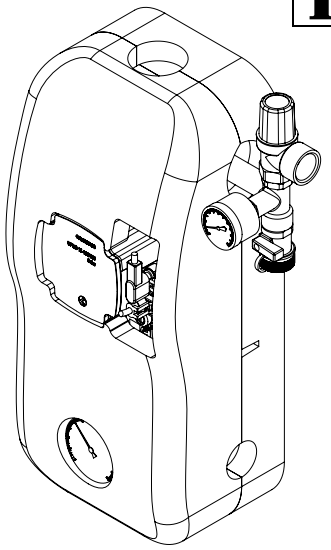

+

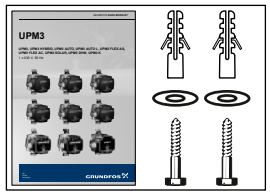

TB	110°C*	
PB	8 bar	

* Pump instructions

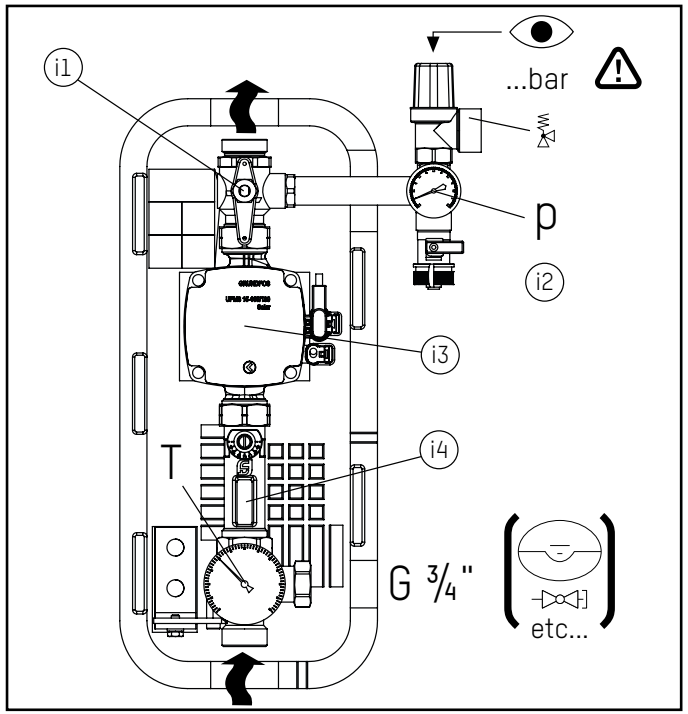

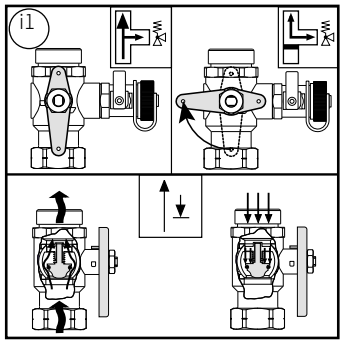

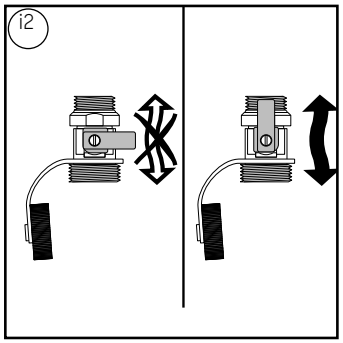

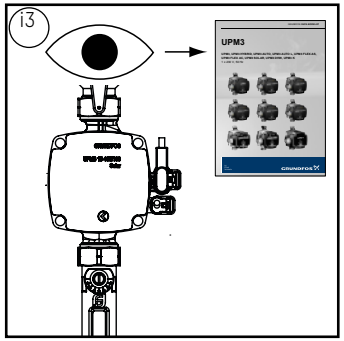

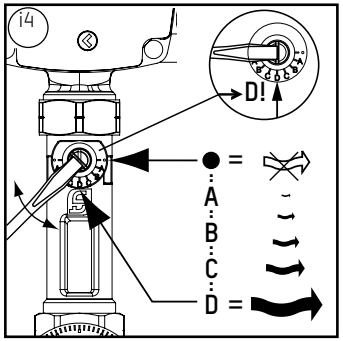

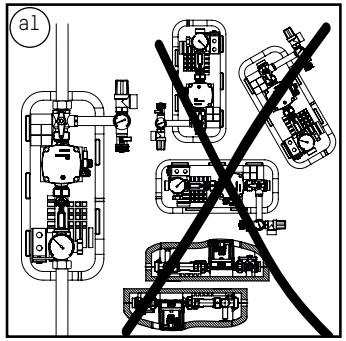

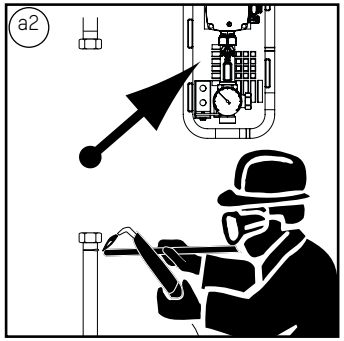

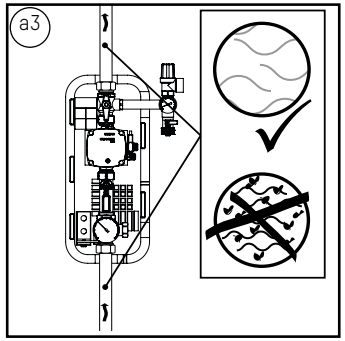

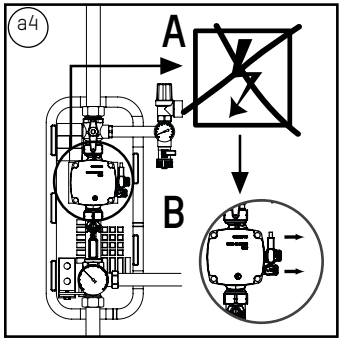

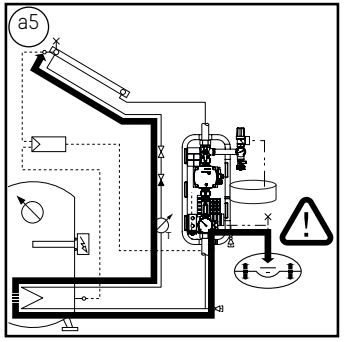
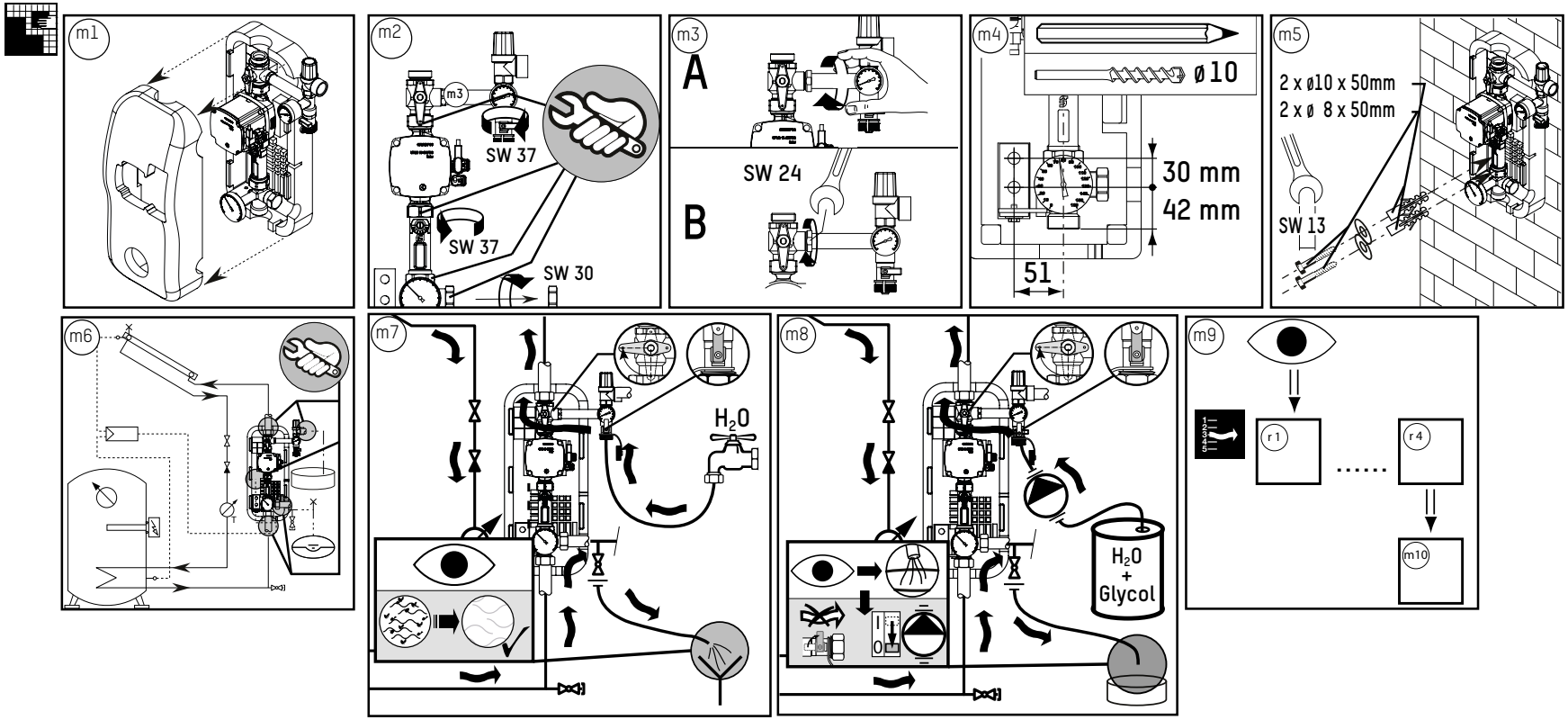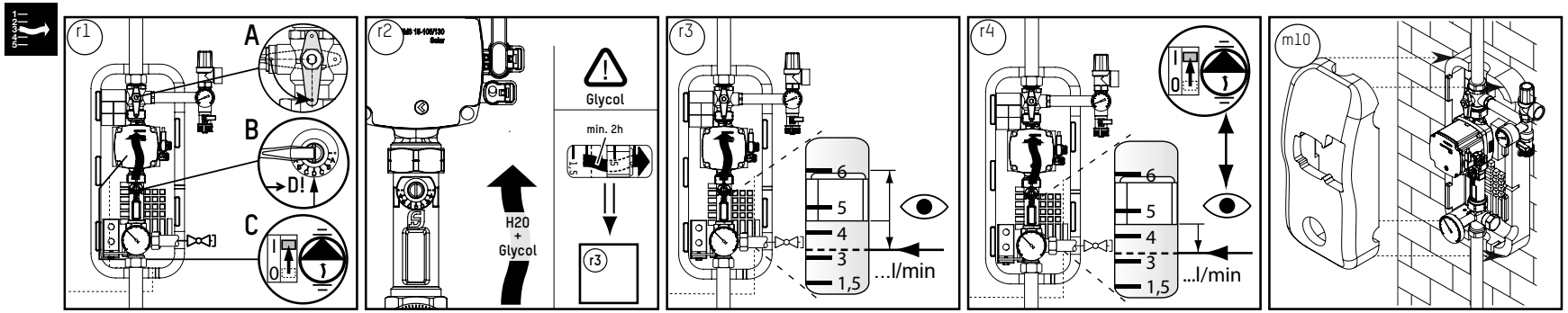
TACOSOL CIRC ER HE - SG